DRESSER UTILITY SOLUTIONS

ROOTS REGULATORS

B31 Series Regulator

Light Commercial and Industrial Regulator

Appropriate for light commercial and industrial uses where inches of water column or pounds delivery is desired such as utility services and small to medium sized furnaces and boilers. The rapid response of the B31 is particularly well suited for applications where sudden on/off loads could cause shock problems.

Descriptions

- B31R – The B31R is the internal relief valve (R) version of the B31 Series. The 1" internal relief valve provides exceptional relief capacity
- B31N – The B31N is a spring loaded self-operated regulator with no internal relief (N) valve. This model can be used on low or intermediate inlet pressures where an internal relief or other type of over-pressure protection device is not required
- B31IMN – The B31IMN is equipped with an Internal Monitoring (IM) device and no internal relief valve (N). This version is appropriate for applications where overpressure protection is desired without the relief of gas to the atmosphere
- B31IMR – The B31IMR is equipped with an Internal Monitoring (IM) device as well as a back-up Internal Relief Valve (R). This version is appropriate for applications where an added level of overpressure protection is desired
- B31IMRV – The B31IMRV is equipped with an Internal Monitoring (IM) device as well as a back-up Internal Relief Valve® and a Vent (V) hole in the sliding orifice. The Vent hole option allows the relief valve to "weep" gas to the atmosphere and signal monitor control in the event the main valve fails to control the downstream pressure
- B31RAS – The B31RAS is equipped with a Low Pressure Shut-off Valve and Internal Relief. The low-pressure shut-off valve will close if the flow through the regulator exceeds its maximum flow rate (See Capacity Table for shut-off flow values). The internal relief valve will open if the downstream pressure rises approximately 7" w.c. above the regulator's set point

Option Designations

- N – No Internal Relief
- R – Internal Relief
- IMN – Internal Monitor with no Internal Relief
- IMR – Internal Monitor with Internal Relief
- IMRV – Internal Monitor with Internal Relief and Vent
- HP – All models for outlet pressures > 0.5 psig
- RAS – Internal Relief with Low Pressure Shut-off valve

Model B31 Series regulators are certified to B109.4/CSA 6.18, and Z21.80/CSA 6.22 Class I & II specifications.

Features

- True bubble tight lock-up
- Field Interchangeable orifice
- 27 in^2 of diaphragm area
- Spring-loaded internal relief valve assembly
- Interchangeable adjustment spring
- Controlled breather orifice size eliminates pulsation and provides normal actuation at low flows
- Wide range of NPT valve body sizes including mixed inlet and outlet sizes; angle body

Benefits

- Smooth control at widely varying inlet pressures
- Rugged construction
- Fast response protects equipment from shock damage
- Unmatched overpressure protection with Internal Monitor plus Internal Relief (IMR) option
- No special tools required for outlet pressure adjustment
- Designed to meet D.O.T., ANSI, CSA, and AGA-GAMA Safety Standards

B31 SERIES LIGHT COMMERCIAL AND INDUSTRIAL REGULATOR SHIPPING WEIGHT

Eight regulators per box Box weight: 52 lbs.

B31 DIMENSIONS (INCHES)

Dimensions (inches)							
Valve Body	**A**	**B**	**C**	**D**	**E**	**F**	**R**
3/4 & 1	3-3/4	2-1/8	5-13/16	7-13/16	3-1/4	4-7/8	2-1/4
1-1/4	4	2-1/8	5-13/16	7-13/16	3-1/4	4-7/8	2-1/4
3/4 x 1 90° Angle Body	1	1-5/8	5-13/16	7-13/16	3-1/4	4-7/8	2-1/4

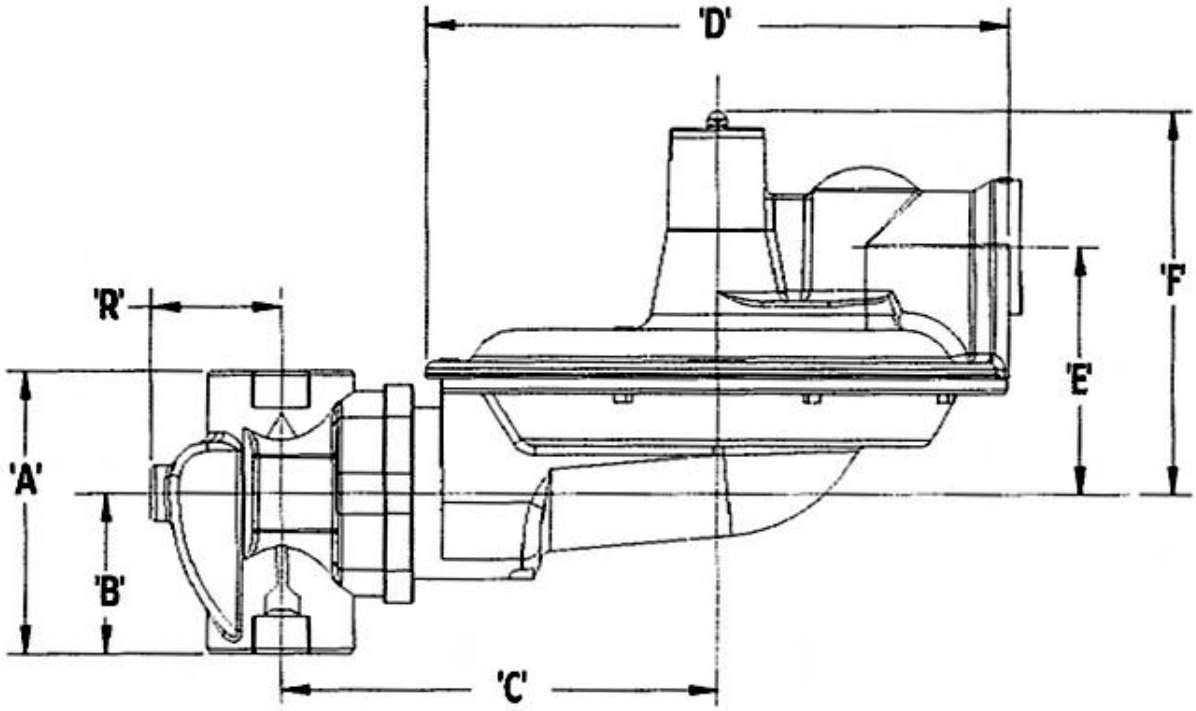

OPERATIONAL SCHEMATIC

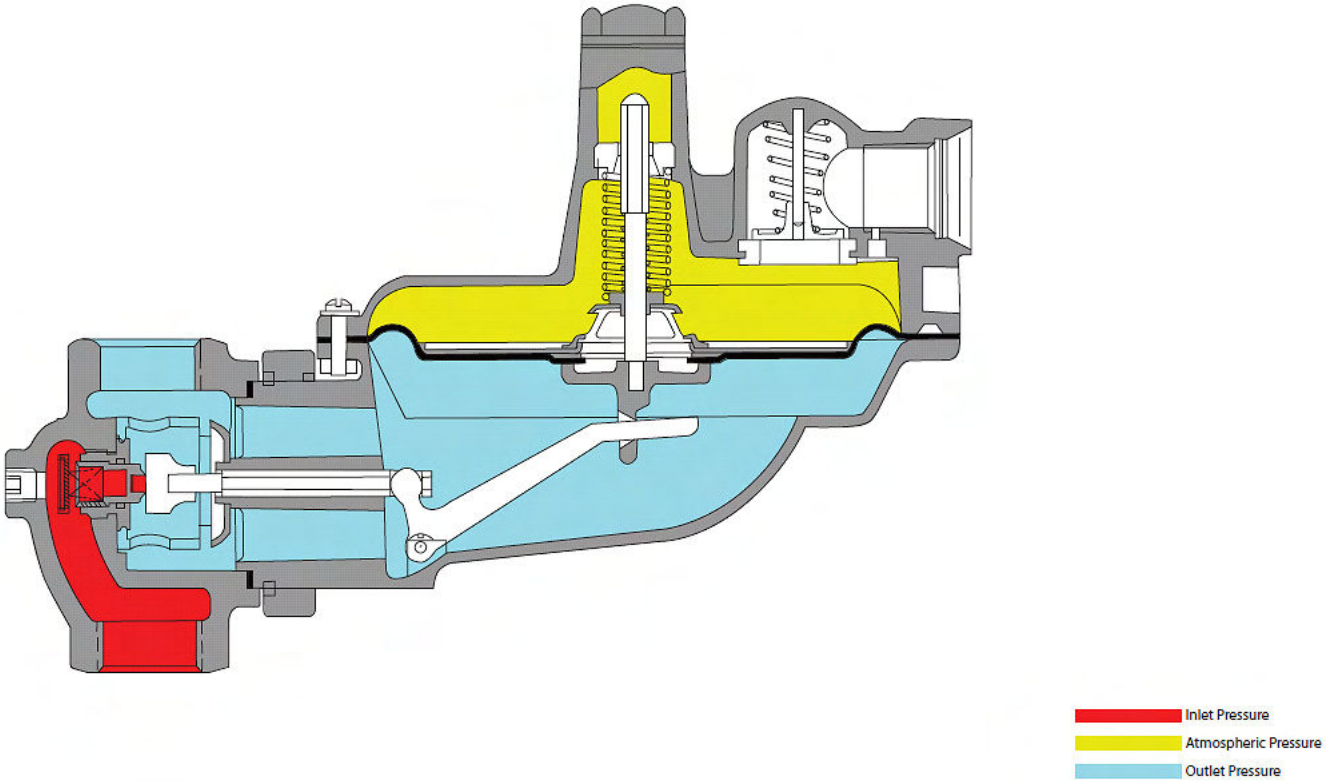

Note Valve shown in closed position.

SPRING DATA, SPRING COLOR OUTLET PRESSURE RANGE*

Spring Color	Outlet Pressure Range Models N, R, & RAS		Outlet Pressure Range Models IMN & IMR	
Spring Data, Model B31	**inches w.c.**	**mbar**	**inches w.c.**	**mbar**
Brown	4.5 to 5.5	11.2 to 13.7	4.5 to 5.5	11.2 to 13.7
Dark green	5.0 to 6.5	12.4 to 16.7	5.5 to 6.0	13.7 to 14.9
Gray	4.0 to 9.0	9.9 to 22.4	4.5 to 8.5	11.2 to 21.1
Light Green	5.5 to 8.0	11.2 to 19.9	6.0 to 7.5	14.9 to 18.6
Black	7.3 to 11.0	18.1 to 27.3	6.0 to 9.0	14.9 to 22.4
Blue	8.0 to 12.0	19.9 to 29.8	7.5 to 11.5	18.6 to 28.6
Silver	11.0 to 16.0	27.3 to 39.8	8.0 to 14.5	19.9 to 36.1
Model B31HP**	PSIG	mbar	PSIG	mbar
Red/gray	0.75 to 1.1	51.7 to 75.8	0.5 to 1.0	34.5 to 68.9
Yellow	0.9 to 1.4	62.0 to 96.5	1.0 to 1.5	68.9 to 103.0
Red	1.3 to 2.0	89.6 to 137.9	1.3 to 1.9	89.6 to 131.0
White	1.75 to 2.5	121.0 to 172.0	1.5 to 2.5	68.9 to 172.0

*Spring Ranges are approximate and may vary by application.

**Warning Springs are not interchangeable between B31 and B31HP.

ORIFICE DATA, WIDE OPEN FLOW COEFFICIENTS AND MAXIMUM PRESSURES

Orifice Size (inches)	K-Factor	Maximum Operating Inlet Pressure				Maximum Emergency Inlet Pressure All Outlet All Models		Maximum Emergency Outlet Pressure (Gas Containment)			
		in. w.c. Delivery Pressure		PSIG Delivery Pressure				in. w.c. Delivery Pressure		PSIG Delivery Pressure	
		PSIG	mbar	PSIG	mbar	PSIG	mbar	PSIG	mbar	PSIG	mbar
1/8	30	125	8.6	175	12.1	300	20.6	18	1.2	60	4.1
1/8 IM	35	125	8.6	175	12.1	300	20.6				
3/16	71	125	8.6	175	12.1	300	20.6				
3/16 IM	68	125	8.6	175	12.1	300	20.6				
1/4	127	125	8.6	125	8.6	300	20.6				
1/4 IM	112	125	8.6	125	8.6	300	20.6				
5/16	193	100	6.9	100	6.9	150	10.3				
5/16 IM	138	100	6.9	100	6.9	150	10.3				
3/8	290	65	4.5	60	4.1	150	10.3				
1/2	500	40	2.8	40	2.8	100	6.9				

OPERATING TEMPERATURE RANGE

- -20°F to 150°F
- Silicone valve seats available for applications below -20°F

ADDITIONAL SPECIFICATIONS

Available Vent Sizes:	1/4", 3/8", 3/4", and 1"
Other Available Options	Seal wire to indicate unapproved tampering
	1/8" pipe plug tap on upstream side of valve body
	Tamper-proof (Torx head) diaphragm case screws

CONSTRUCTION

ROOTS Regulators takes pride in delivering products with the utmost concern for safety, quality, and customer satisfaction.

Construction materials

Valve body	High tensile strength cast iron (ASTM A-126, Class A)
Orifice	Aluminum, standard brass, optional (ASTM B16, Alloy 360)
Valve seat	Buna-N or silicone (for temperature below -20°F)
Valve stem	Aluminum
Lever pin	Stainless steel (Type 303)
Lever	Zinc and dichromate plated steel (AISI C1010)
Upper diaphragm plate	Zinc and dichromate plated steel (14-gauge steel)
Lower diaphragm plate	Die cast aluminum (ASTM B85 Alloy SC84A)
Diaphragm	Buna-N and nylon reinforcing fabric
Vent valve/seat	Neoprene
Vent screen	Stainless steel (16 mesh)
Adjustment ferrule	Delrin; die cast aluminum for HP ver. (ASTM CS43A)
Seal cap	Die cast aluminum (ASTM CS34A) or ABS plastic
Diaphragm case	Die cast aluminum (ASTM B85 Alloy SC84A)
Internal monitor orifice	Brass (ASTM B16 Alloy 360)

VALVE BODY SIZES

Inlet (inches)	Outlet (inches)	90° Angle	Straight
3/4	3/4	X	X
3/4	1	X	X
3/4	1 - 1/4	-	X
1	1	X	X
1	1 - 1/4	-	X
1 - 1/4	1 - 1/4	-	X

Note X indicates that the valve body is available in that configuration.

CORRECTION FACTORS FOR NON-NATURAL GAS APPLICATIONS

The B31 may be used to control gases other than natural gas. To determine the capacity for gases other than natural gas, multiply the values within the capacity tables by a correction factor. The table below lists the correction factors for some of the more common gases:

Gas Type	Specific Gravity	Correction Factor (CF)
Air	1.00	0.77
Butane	2.01	0.55
Carbon Dioxide (Dry)	1.52	0.63
Carbon Monoxide (Dry)	0.97	0.79
Natural Gas	0.60	1.00
Nitrogen	0.97	0.79
Propane	1.53	0.63
Propane-Air-Mix	1.20	0.71

To calculate the correction factor for gases not listed in the table above, use the gases' specific gravity and insert it in the formula listed below:

Correction Factor (CF) = $\sqrt{\frac{SG_1}{SG_2}}$

Where:

SG_1 = Specific gravity of the gas in which the capacity is published.

SG_2 = Specific gravity of the gas to be controlled.

Wide Open Flow Calculations

For wide-open orifice flow calculations use the following equations:

For: $\frac{P_1}{P_2} < 1.89$ use: $Q = K\sqrt{P_2(P_1 - P_2)}$ For: $\frac{P_1}{P_2} > 1.89$ use: $Q = \frac{KP_1}{2}$

Where: P_1 = Absolute Inlet Pressure (PSIA) P_2 = Absolute Outlet Pressure (PSIA)

Q = Flow Rate (SCFH) K = Orifice Coefficient (SCFH/PSI)

Disclaimers for Sizing Charts

If your exact demands are not found in the capacity charts, follow the link below for sizing.

https://regulatorsizing.dresserngs.com/RegulatorSizing/disclaim.html

To convert standard cubic feet per hour (SCFH) of natural gas to British thermal units (BTU), you can use the approximate conversion that 1 cubic foot of natural gas yields about 1,030 BTU. Therefore, multiply the SCFH value by 1,030 to get the BTU equivalent.

COMPLIANCE

B31 (internal relief model) compliance with ANSI Z21.80, Line Pressure Regulators

Model B31R used with a 1" vent connection is listed and compliant with ANSI Z21.80. With inlet pressures up to 2 PSIG, the B31R is compliant in any configuration.

With inlet pressures up to 5 PSIG, the B31R is compliant in the configurations listed in the following table:

Orifice Size	Set Point	Maximum Vent Line Length (ft.)*	Number of Elbows**
1/8"	Up to 1 PSIG	50	4 or less
3/16"	Up to 1 PSIG	40	4 or less
1/4"	Up to 7" w.c.	40	4 or less
5/16"	Up to 7" w.c.	15	4 or less
3/8"	Up to 7" w.c.	10	2 or less

With inlet pressures up to 10 PSIG, the B31R is compliant in the configurations listed in the following table:

Orifice Size	Set Point	Maximum Vent Line Length (ft.)*	Number of Elbows**
1/8"	Up to 14" w.c.	50	4 or less
3/16"	Up to 14" w.c.	50	4 or less
1/4"	Up to 7" w.c.	20	4 or less
5/16"	Up to 7" w.c.	No vent pipe	No elbows

*Clean 1" black steel pipe

**For each elbow greater than 4 elbows, subtract 2.6 ft. from the maximum vent line length.

ANSI American National Standards Institute	ANSI Z21.80/CSA 6.22
What is it?	This standard specifies requirements for the design, performance, and safety of gas regulators, ensuring they meet industry criteria for use in gas systems.
Where does it apply?	ANSI Z21.80/CSA 6.22 applies to line pressure regulators or all regulators after the service regulator. These certifications indicate compliance with relevant standards for safety and performance in the United States (ANSI) and Canada (CSA).
Where does it *not* apply?	These standards do not apply to service regulators because they are specifically intended for gas pressure regulators within appliance piping systems.
What is a line pressure regulator?	A line pressure regulator covers all pipe sizes and outlet pressures, as long as it is installed after the service regulator.

ANSI American National Standards Institute	ANSI B109.4/CSA 6.19
What is it?	A certification specification that controls the manufacturing of gas regulators to ensure they meet industry requirements for safety and performance.
Where does it apply?	This standard applies to service regulators which are typically used by gas utilities. These certifications indicate compliance with relevant standards for safety and performance in the United States (ANSI) and Canada (CSA).
Where does it *not* apply?	ANSI B109.4/CSA 6.18 does not apply to gas pressure regulators that are installed downstream of the service regulator, such as appliance regulators.
What is a service regulator?	A service regulator is used for nominal pipe size 1 1/4" (32mm) and smaller with outlet pressures of 2 psig (13.8 kPa) and less.

B31 SERIES LIGHT COMMERCIAL AND INDUSTRIAL REGULATOR, MODELS N AND R

7″ w.c. (17 mbar) Capacity Table (1″ Droop*) 1″ Valve Body

Capacities in SCFH of 0.6 S.G. gas; base conditions of 14.7 PSIA and 60° F.

Typical Capacity Info.	
Manufacturer	ROOTS Regulators
Type and model	B31R
Regulator	
Inlet size	3/4″ NPT
Outlet size	3/4″ NPT
Vent Size	1″ NPT

Inlet Pressure (PSIG)	**Orifice Size**					
	1/8″	**3/16″**	**1/4″**	**5/16″**	**3/8″**	**1/2″**
8″ w.c.			100	130	190	270
10″ w.c.			110	160	240	300
12″ w.c.		100	115	165	250	310
14″ w.c.		110	170	190	330	440
16″ w.c.		120	180	205	340	450
21″ w.c.		130	230	275	420	585
24″ w.c.	90	150	230	275	420	585
1	110	160	270	340	560	640
2	150	255	450	560	845	1120
3	190	325	560	770	1090	1470
5	260	470	830	1050	1400	1750
10	400	870	1470	1950	2200	2400
20	580	1020	1670	2120	2560	2650
30	700	1900	2550	2600	2680	2700
40	910	2300	2600	2630	2750	2760
50	1070	2370	2610	2670	2890	
60	1150	2420	2700	2720	2930	
70	1340	2500	2750	2770		
80	1490	2650	2825	2875		
90	1640	2775	2930	3000		
100	1890	2910	3050	3125		
125	2305	3420	3500			

Inlet Effect[A] (inches w.c.)	0.1	0.2	0.3	0.3	0.4	0.5
Lock Up[B] (inches w.c.)	0.3	0.5	0.6	0.8	0.9	1.0

Notes:

*Individual regulator performance may vary from data shown.

A. Change in outlet pressure for 10 PSIG inlet pressure change.

B. Outlet pressure increase required for lock up.

Inlet pressure is too low to achieve desired outlet pressure.

Do not operate orifice in shaded inlet pressure area.

B31 PERFORMANCE CURVES

7" w.c. Set Point

Type and model	B31R
Inlet size	1 1-/4" NPT
Outlet size	1 1/4" NPT
Vent Size	1/4"

All test results are reported at a base of 14.7 PSIG at 60º F and with 0.6 S.G. gas.

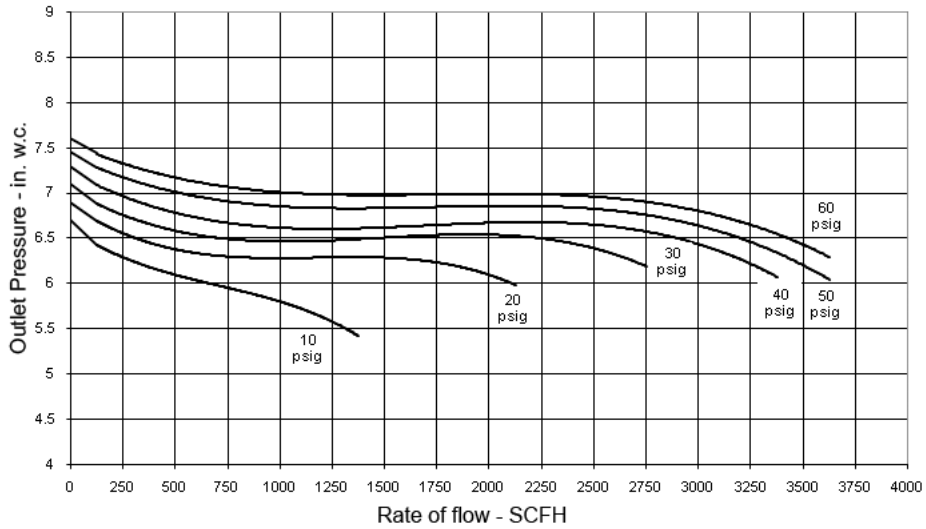

B31 RELIEF CURVES

7"w.c. Set Point

Type and model	B31R
Inlet size	3/4" NPT
Outlet size	1" NPT
Vent Size	1" NPT

All test results are reported at a base of 14.7 PSIA at 60º F and with 0.6 S.G. gas.

Regulator set at 7.0" w.c. for relief testing with 40 PSI inlet pressure @ 50 SCFH as per ANSI B109.4.

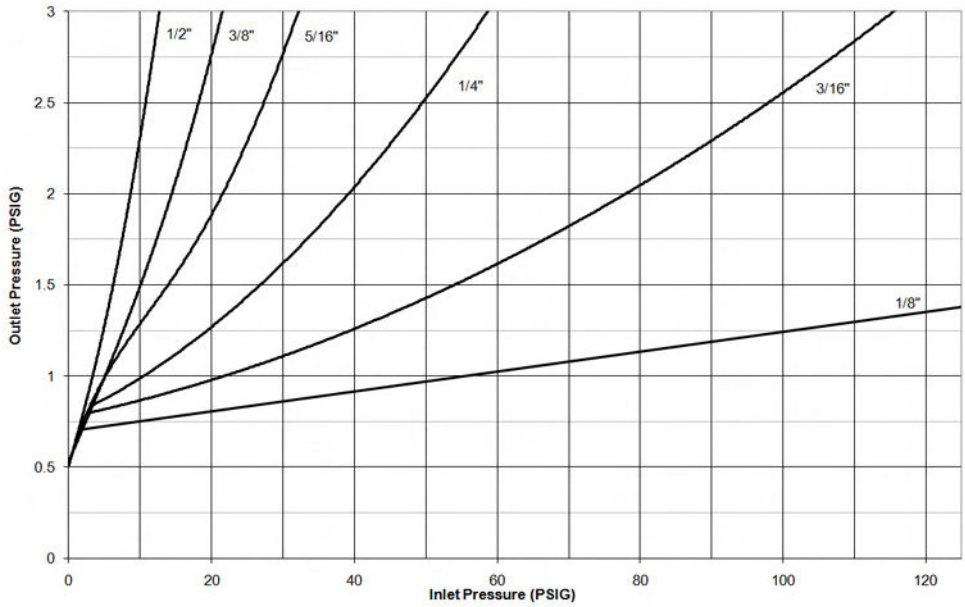

B31 SERIES COMMERCIAL REGULATOR, MODELS N AND R

14" w.c. (34 mbar) Capacity Table (2" Droop*) 1" Valve Body

Typical Capacity Info.	
Manufacturer	ROOTS Regulators
Type and model	B31R
Regulator	
Inlet size	3/4" NPT
Outlet size	1" NPT

Capacities in SCFH of 0.6 S.G. gas; base conditions of 14.7 PSIA and 60° F.

Inlet Pressure (PSIG)	**Orifice Size**					
	1/8"	**3/16"**	**1/4"**	**5/16"**	**3/8"**	**1/2"**
16		90	130	170	185	260
21	70	110	150	190	205	305
24	80	120	160	225	225	340
1	100	145	200	240	290	410
2	120	210	300	380	475	630
3	155	270	375	500	580	820
5	210	380	560	660	800	1100
10	350	575	820	1000	1180	1500
20	510	810	1240	1300	1700	1550
30	615	1100	1500	2400	2750	2750
40	790	1350	1740	2800	2900	3000
50	1000	1530	1820	3000	3150	
60	1100	1950	2600	3200	3300	
70	1300	2130	3100	3350		
80	1350	2380	3275	3425		
90	1450	2500	3300	3520		
100	1520	2710	3400			

Inlet Effect[A] (inches w.c.)	0.1	0.2	0.3	0.4	0.5	0.6
Lock Up[B] (inches w.c.)	0.4	0.6	0.7	0.9	0.9	0.9

Notes:

*Individual regulator performance may vary from data shown.

A. Change in outlet pressure for 10 PSIG inlet pressure change.

B. Outlet pressure increase required for lock up.

Inlet pressure is too low to achieve desired outlet pressure.

Do not operate orifice in shaded inlet pressure area.

B31 PERFORMANCE CURVES

14″ w.c. Set Point

Type and model	B31R
Inlet size	3/4″ NPT
Outlet size	1″ NPT
Vent Size	3/16″ NPT

All test results are reported at a base of 14.7 PSIA at 60º F and with 0.6 S.G. gas.

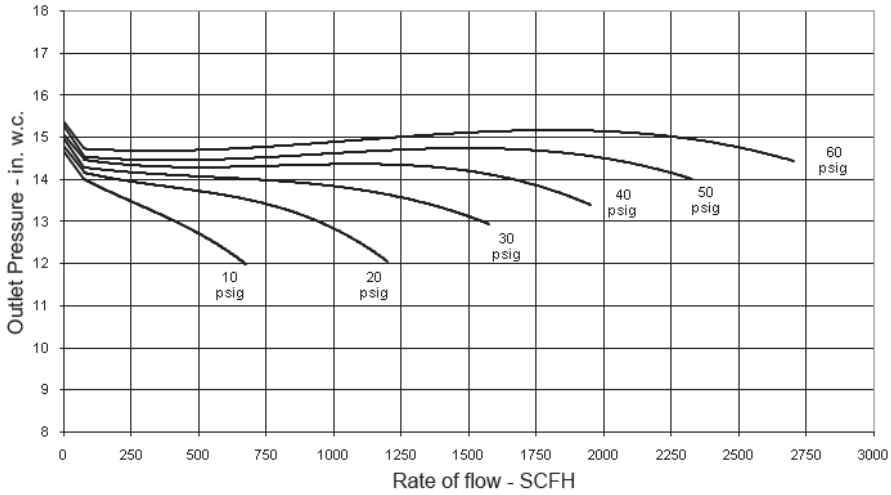

B31 RELIEF CURVES

14" w.c. Set Point

Type and model	B31R
Inlet size	3/4″ NPT
Outlet size	1″ NPT
Vent Size	1″ NPT
Orifice Size	3/16″

All test results are reported at a base of 14.7 PSIG at 60º F and with 0.6 S.G. gas.

Regulator set at 14.0" w.c. for relief testing with 40 PSI inlet pressure @ 50 SCFH as per ANSI B109.4.

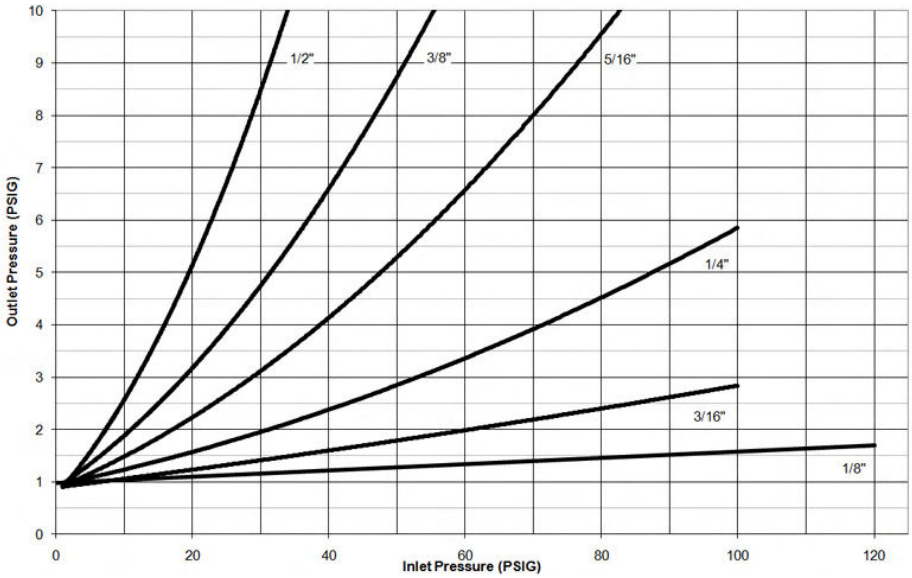

B31HP SERIES LIGHT COMMERCIAL AND INDUSTRIAL REGULATOR, MODELS N, R

1 PSIG (69 mbar) Capacity Table (1% Absolute Droop*) 1" Valve Body

Typical Capacity Info.	
Manufacturer	ROOTS Regulators
Type and model	B31RHP
Regulator	
Inlet size	3/4" NPT
Outlet size	1" NPT

Capacities in SCFH of 0.6 S.G. gas; base conditions of 14.7 PSIA and 60° F.

Inlet Pressure (PSIG)	**Orifice Size**					
	1/8"	**3/16"**	**1/4"**	**5/16"**	**3/8"**	**1/2"**
2	120	200	230	310	360	480
3	160	250	330	420	480	640
5	190	360	490	580	670	880
8	230	480	670	780	890	1260
10	310	550	730	900	1050	1370
15	410	690	980	1170	1350	1810
20	500	830	1150	1400	1600	2100
30	640	1120	1520	1760	2060	2150
40	780	1560	1920	2160	2280	2300
50	950	1610	2170	2360	2380	
60	1100	1800	2360	2530	2550	
75	1340	1960	2500	2680		
85	1510	2550	2850	2900		
100	1760	2870	3010	3100		

Inlet Effect [A] (PSIG)	0.01	0.02	0.02	0.03	0.03	0.04
Lock Up [B] (PSIG)	0.042	0.04	0.04	0.06	0.06	0.06

Notes:

*Individual regulator performance may vary from data shown.

A. Change in outlet pressure for 10 PSIG inlet pressure change. B. Outlet pressure increase required for lock up.

Do not operate orifice in shaded inlet pressure area.

B31HP SERIES LIGHT COMMERCIAL AND INDUSTRIAL REGULATOR, MODELS N, R

1 PSIG (69 mbar) Capacity Table (2% Absolute Droop*) 1" Valve Body

Typical Capacity Info.	
Manufacturer	ROOTS Regulators
Type and model	B31RHP
Regulator	
Inlet size	3/4" NPT
Outlet size	1" NPT

Capacities in SCFH of 0.6 S.G. gas; base conditions of 14.7 PSIA and 60° F.

Inlet Pressure PSIG	**Orifice Size**					
	1/8"	**3/16"**	**1/4"**	**5/16"**	**3/8"**	**1/2"**
2	150	300	420	550	660	880
3	200	370	550	730	860	1190
5	250	540	770	990	1220	1630
8	330	700	1030	1360	1640	2200
10	370	800	1200	1560	1900	2410
15	470	1030	1600	2020	2380	3100
20	550	1250	1900	2420	2920	3200
30	700	1610	2490	3080	3300	3400
40	860	1980	3100	3420	4140	4200
50	1010	2300	3500	3640	4300	
60	1170	2680	3680	3940	4350	
75	1400	2940	3920	4220		
85	1600	3480	4250	4500		
100	1820	3930	4600	4600		

Inlet Effect [A] (PSIG)	0.01	0.02	0.02	0.03	0.03	0.04
Lock Up [B] (PSIG)	0.04	0.04	0.04	0.06	0.06	0.06

Notes:

*Individual regulator performance may vary from data shown.

A. Change in outlet pressure for 10 PSIG inlet pressure change. B. Outlet pressure increase required for lock up.

Do not operate orifice in shaded inlet pressure area.

B31HP PERFORMANCE CURVES

1 PSIG Set Point

Type and model	B31R
Inlet size	3/4″ NPT
Outlet size	1″ NPT
Orifice Size	3/16″

All test results are reported at a base of 14.7 PSIA at 60°F and with 0.6 S.G. gas.

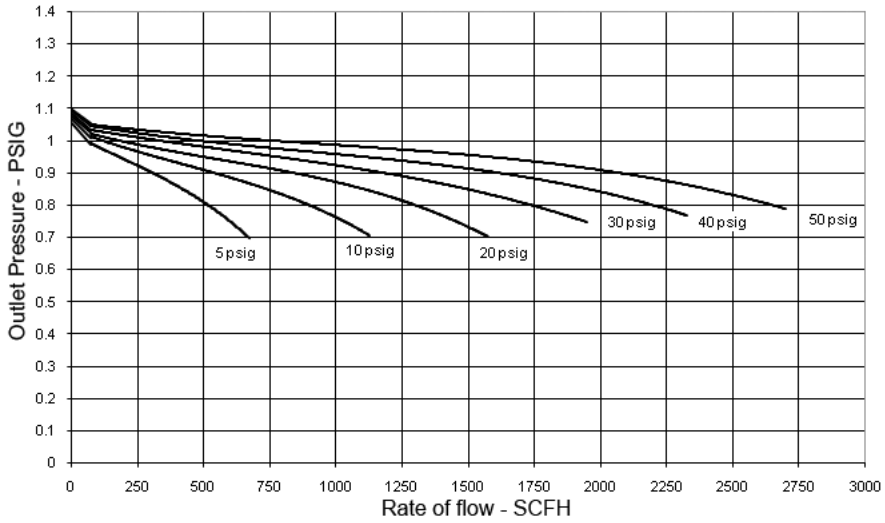

B31HP RELIEF CURVES

1 PSIG Set Point

Type and model	B31R
Inlet size	3/4″ NPT
Outlet size	1″ NPT
Vent Size	1″ NPT

All test results are reported at a base of 14.7 PSIA at 60º F and with 0.6 S.G. gas.

Regulator set at 1 PSIG for relief testing with 40 PSI inlet pressure @ 50 SCFH as per ANSI B109.4.

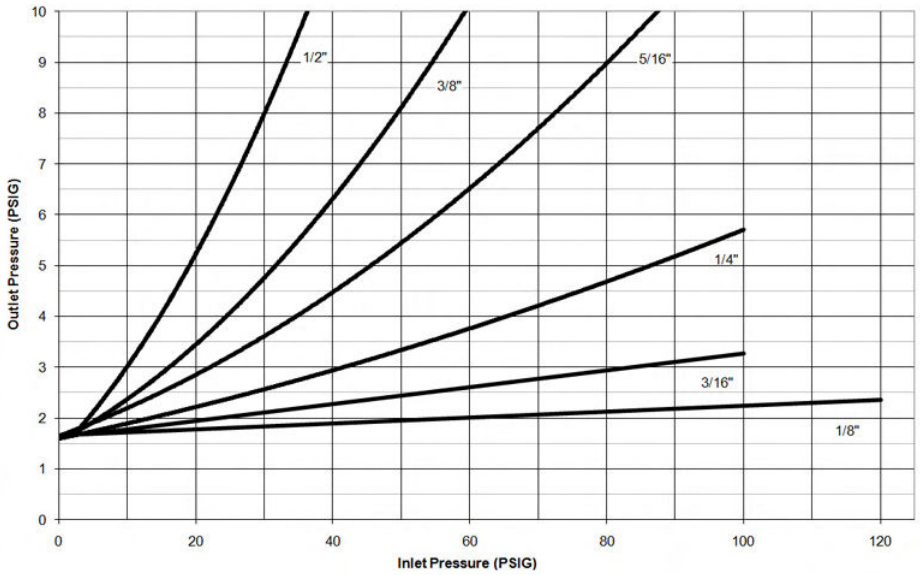

B31HP SERIES LIGHT COMMERCIAL AND INDUSTRIAL REGULATOR, MODELS N, R

2 PSIG (138 mbar) Capacity Table (1% Absolute Droop*) 1" Valve Body

Capacities in SCFH of 0.6 S.G. gas; base conditions of 14.7 PSIA and 60° F.

Typical Capacity Info.

Manufacturer	ROOTS Regulators
Type and model	B31RHP
Regulator	
Inlet size	3/4" NPT
Outlet size	1" NPT

Inlet Pressure (PSIG)	**Orifice Size**					
	1/8"	**3/16"**	**1/4"**	**5/16"**	**3/8"**	**1/2"**
3	100	120	190	210	230	280
5	140	160	260	320	350	450
10	250	290	500	550	600	700
20	450	500	800	900	1000	1200
30	550	600	1000	1200	1350	1400
40	650	800	1200	1300	1500	1600
50	800	900	1400	1600	1700	
60	900	1100	1500	1700	1810	
70	955	1150	1600	1825		
80	1100	1250	1700	1975		
90	1250	1320	1830	2100		
100	1400	1400	1940			
125	1600	1700	2150			

Inlet Effect [A] (PSIG)	0.01	0.02	0.03	0.04	0.05	0.06
Lock Up [B] (PSIG)	0.04	0.05	0.05	0.06	0.06	0.06

Notes:

*Individual regulator performance may vary from data shown.

A. Change in outlet pressure for 10 PSIG inlet pressure change.

B. Outlet pressure increase required for lock up.

Do not operate orifice in shaded inlet pressure area.

B31HP SERIES LIGHT COMMERCIAL AND INDUSTRIAL REGULATOR, MODELS N, R

2 PSIG (138 mbar) Capacity Table (2% Absolute Droop*) 1" Valve Body

Typical Capacity Info.	
Manufacturer	ROOTS Regulators
Type and model	B31RHP
Regulator	
Inlet size	3/4" NPT
Outlet size	1" NPT

Capacities in SCFH of 0.6 S.G. gas; base conditions of 14.7 PSIA and 60° F.

Inlet Pressure PSIG	**Orifice Size**					
	1/8"	**3/16"**	**1/4"**	**5/16"**	**3/8"**	**1/2"**
3	120	200	320	400	480	530
5	190	330	500	600	700	850
10	280	550	800	1000	1100	1320
20	550	900	1300	1500	1800	2000
30	700	1100	1700	2000	2100	2300
40	800	1400	2000	2300	2425	2700
50	1000	1700	2400	2500	2610	
60	1100	2000	2500	2620	2700	
70	1125	2100	2600	2850		
80	1300	2150	2800	2940		
90	1475	2250	2880	3000		
100	1700	2250	2900	3060		
125	2100	2420	2980			

Inlet Effect [A] (PSIG)	0.01	0.02	0.03	0.04	0.05	0.06
Lock Up [B] (PSIG)	0.04	0.05	0.05	0.06	0.06	0.06

Notes:

*Individual regulator performance may vary from data shown.

A. Change in outlet pressure for 10 PSIG inlet pressure change.

B. Outlet pressure increase required for lock up.

Do not operate orifice in shaded inlet pressure area.

B31HP PERFORMANCE CURVES

2 PSIG Set Point

Type and model	B31HP
Inlet size	3/4″ NPT
Outlet size	1″ NPT
Orifice Size	3/16″

All test results are reported at a base of 14.7 PSIA at 60°F and with 0.6 S.G. gas.

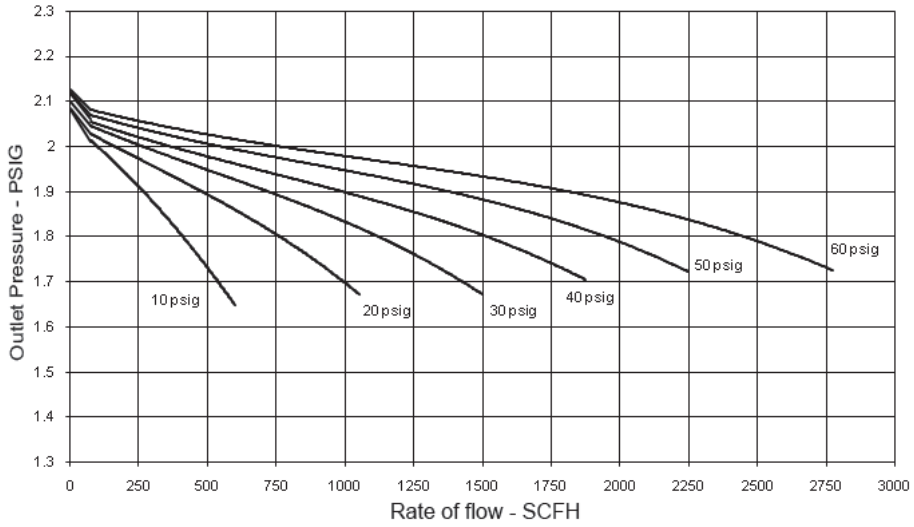

RELIEF CURVES

2 PSIG Set Point

Type and model	B31HP
Inlet size	3/4″ NPT
Outlet size	1″ NPT
Orifice Size	1″ NPT

All test results are reported at a base of 14.7 PSIA at 60º F and with 0.6 S.G. gas.

Regulator set at 2 PSIG for relief testing with 40 PSI inlet pressure @ 50 SCFH as per ANSI B109.4.

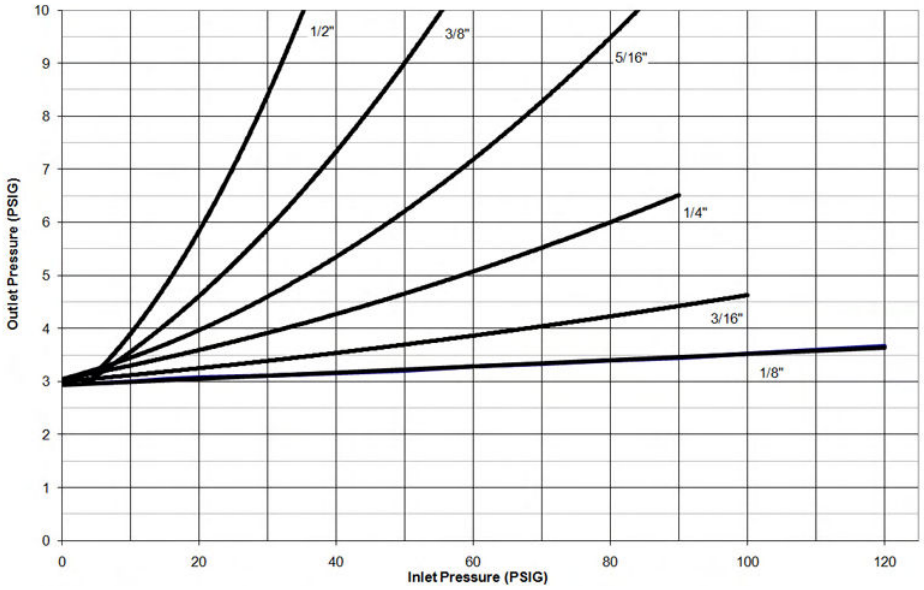

B31 SERIES LIGHT COMMERCIAL AND INDUSTRIAL REGULATOR, MODELS N AND R

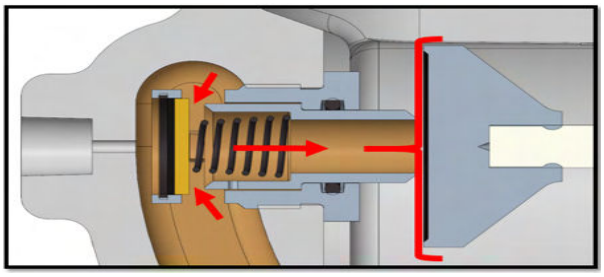

A. Standard regulator and upstream monitor orifice.

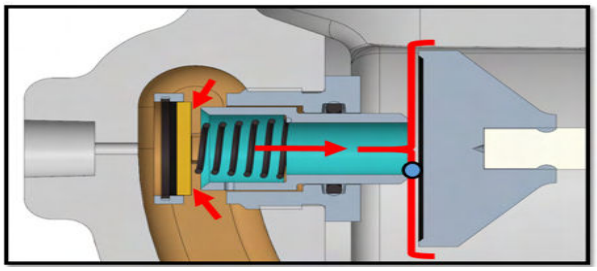

B. Standard regulator orifice failed; upstream monitor orifice control.

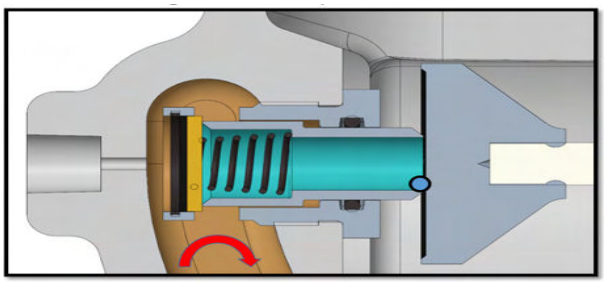

C. Main orifice failed - upstream monitor orifice lock-up.

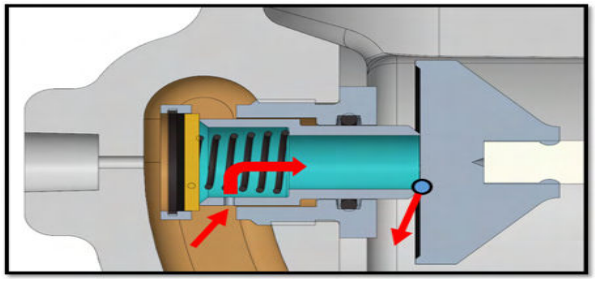

D. V option - vents a small volume of gas to atmosphere through relief valve.

Inlet pressure Outlet pressure

PRINCIPLE OF OPERATION

A. Normal operation. The internal monitor IM orifice performs like a standard regulator and monitor regulator in that main orifice and valve seat actuate to control outlet flow and pressure under normal flow conditions. If there is no demand, the main seat and internal monitor orifice will close.

B. Monitor operation. If the main valve seat fails to control the gas flow and pressure due to foreign matter between the seat and orifice face, or if the seat is eroded, the internal monitor orifice automatically goes into operating position at a slightly at a slightly higher outlet pressure (see Internal Monitor Lock-up Pressure table). Any time the pressure on the main diaphragm exceeds the force of the fixed monitor spring, the increased outlet pressure causes the main valve seat to push against the sliding orifice. The sliding orifice compresses the monitor spring and positions the monitor orifice to control the gas flow. The IM orifice now functions as a monitor regulator and continues to monitor as long as the main seat fails to control at the normal adjusted outlet pressure. If the gas load demand is increased beyond the internal monitor's capacity, the outlet pressure is reduced to normal adjusted pressure and the regulator resumes normal regulation.

C. Monitor lock-up. If the demand for gas is decreased to zero flow during monitor operation, the sliding orifice continues to close until its orifice is in the gas tight position (monitor lock-up) against the BUNA-N monitor valve seat. (See the Internal Monitor Lock-up Pressure table for the outlet pressure required for internal monitor lock-up.)

D. Vent hole V option. On installations where a small volume of over-pressure gas can be safely vented to the atmosphere, the advantages of both the pilot relief valve and monitor safety can be combined. If the flow is decreased to zero or just greater than zero, the vent hole in the internal monitor orifice allows gas to slowly bleed downstream and cause the pressure to rise to the relief point of the pilot's internal relief valve. The gas then bleeds to the atmosphere indicating a problem with the regulator.

INTERNAL MONITOR LOCK-UP PRESSURE

Pilot Spring Color	Outlet Pressure Set Point	IM lock-up Pressure Models B31 IMN and IMR	Vent Relief Pressure Model B31 IMRV With Green Relief Spring
Brown	5.0" w.c. (12.4 mbar)	10.0" w.c. (24.9 mbar)	14.8" w.c. (36.8 mbar)
Dark Green	6.0" w.c. (14.9 mbar)	12.0" w.c. (29.8 mbar)	15.8" w.c. (39.3 mbar)
Light Green	7.0" w.c. (17.4 mbar)	12.5" w.c. (31.1 mbar)	16.6" w.c. (41.3 mbar)
Black	8.0" w.c. (19.9 mbar)	13.5" w.c. (33.5 mbar)	17.5" w.c. (43.5 mbar)
Blue	9.0" w.c. (22.4 mbar)	14.5" w.c. (36.1 mbar)	19.5" w.c. (48.5 mbar)
Silver	11" w.c. (27.4 mbar)	17.0" w.c. (42.3 mbar)	22.6" w.c. (56.2 mbar)
Red/gray	20" w.c. (49.7 mbar)	27.0" w.c. (67.2 mbar)	1.2 PSIG (82.7 mbar)
Yellow	1 PSIG (69 mbar)	1.3 PSIG (89.6 mbar)	1.5 PSIG (103 mbar)
Red	1.5 PSIG (103 mbar)	1.75 PSIG (121 mbar)	2.0 PSIG (138 mbar)
White	2.0 PSIG (138 mbar)	2.3 PSIG (159 mbar)	3.5 PSIG (241 mbar)

Note: The above tests were conducted using a 1/8" diameter nylon rod glued to the valve seat.

B31 SERIES LIGHT COMMERCIAL AND INDUSTRIAL REGULATOR, MODELS IMN, IMR, AND IMV

7" w.c. (17 mbar) Capacity Table (1" Droop*) 1" Valve Body

Capacities in SCFH of 0.6 S.G. gas; base conditions of 14.7 PSIA and 60° F.

Typical Capacity Info.	
Manufacturer	ROOTS Regulators
Type and model	B31 IMN, IMR, IMV
Regulator	
Inlet size	3/4" NPT
Outlet size	1" NPT

Inlet Pressure (PSIG)	**Orifice Size**			
	1/8"	**3/16"**	**1/4"**	**5/16"**
1	95	165	270	340
2	150	255	450	550
3	190	325	560	670
5	260	470	800	900
10	400	840	1220	1400
15	450	1050	1600	1850
25	670	1350	2200	2500
40	960	1880	3100	3660
60	1280	2500	4300	4890
75	1530	3120	4900	5950
90	1850	3600	5500	6650
100	1920	3875	5680	6700
125	2200	3990	5800	

Lock Up[A] (inches w.c.)	0.3	0.5	0.6	0.8

Notes:

*Individual regulator performance may vary from data shown.

A. Outlet pressure increase required for lock up.

Do not operate orifice in shaded inlet pressure area.

B31 IMR RELIEF CURVES

7" w.c. Set Point

Type and model	B31 IMR
Spring Color	Light Green
Inlet size	3/4" NPT
Outlet size	1" NPT

All test results are reported at a base of 14.7 PSIA at 60º F and with 0.6 S.G. gas.

Regulator set at 7.0" w.c. for relief testing with 40 PSI inlet pressure @ 50 SCFH as per ANSI B109.4.

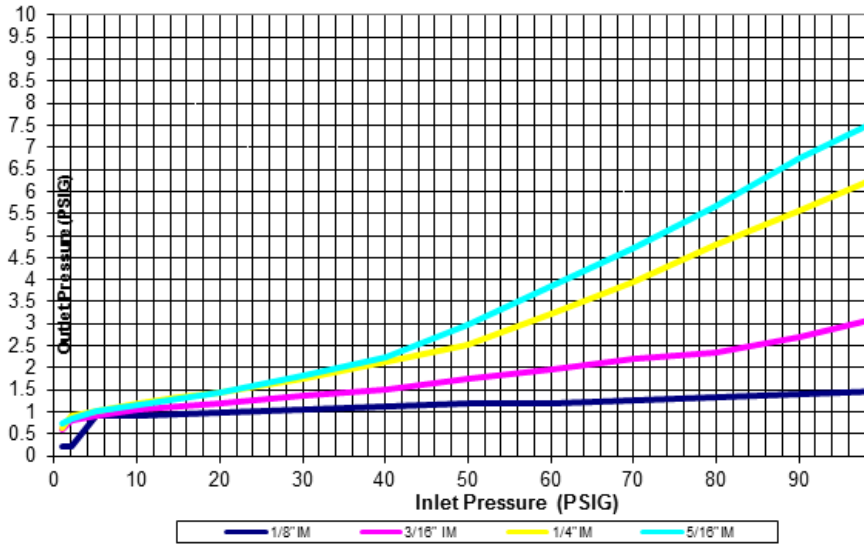

B31 SERIES LIGHT COMMERCIAL AND INDUSTRIAL REGULATOR, MODELIMN, IMR, IMV

14" w.c. (34 mbar) Capacity Table (2" Droop*) 1" Valve Body

Capacities in SCFH of 0.6 S.G. gas; base conditions of 14.7 PSIA and 60° F.

Typical Capacity Info.	
Manufacturer	ROOTS Regulators
Type and model	B31 IMN, IMR, IMV
Regulator	
Inlet size	3/4"
Outlet size	1"

Inlet Pressure (PSIG)	**Orifice Size**			
	1/8"	**3/16"**	**1/4"**	**5/16"**
1	100	130	195	235
2	130	230	315	400
3	170	290	420	530
5	240	410	575	700
10	370	650	900	1100
15	470	880	1240	1550
25	600	1300	1840	2300
40	840	1780	2900	3550
60	1120	2400	4000	4700
75	1350	2900	4700	5750
90	1600	3400	5300	6500
100	1780	3610	5500	6600
125	2000	3860	5710	

Lock Up [A] (inches w.c.)	0.4	0.6	0.7	0.9

Notes:

*Individual regulator performance may vary from data shown.

A. Outlet pressure increase required for lock up.

Do not operate orifice in shaded inlet pressure area.

B31 IMR RELIEF CURVES

14" w.c. Set Point

Type and model	B31 IMR
Spring Color	Silver
Inlet size	3/4" NPT
Outlet size	1" NPT

All test results are reported at a base of 14.7 PSIA at 60º F and with 0.6 S.G. gas.

Regulator set at 14" w.c. for relief testing with 40 PSI inlet pressure @ 50 SCFH as per ANSI B109.4.

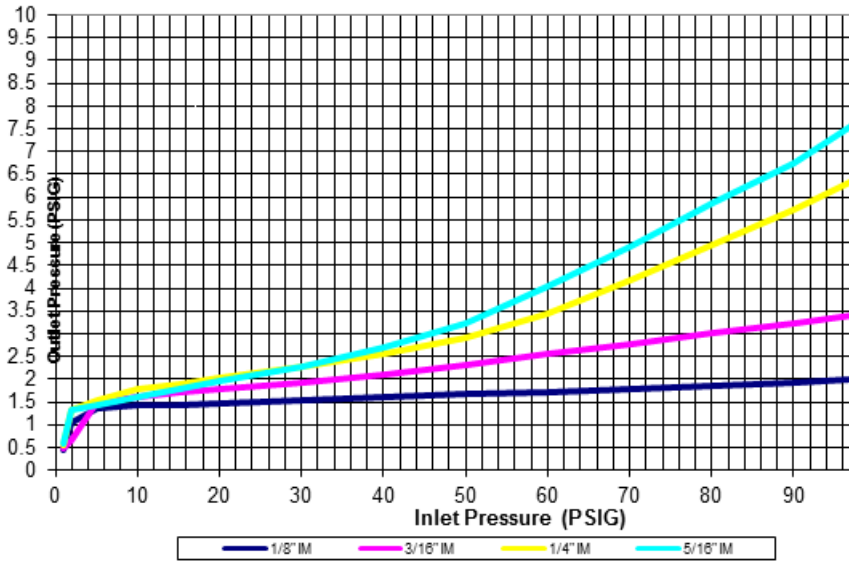

B31 SERIES LIGHT COMMERCIAL AND INDUSTRIAL REGULATOR, MODEL IMNHP, IMRHP, IMVHP

1 PSIG (69 mbar) Capacity Table (1% Absolute Droop*) 1" Valve Body

Typical Capacity Info.	
Manufacturer	ROOTS Regulators
Type and model	B31 IMNHP, IMRHP, IMRVHP
Regulator	
Inlet size	3/4" NPT
Outlet size	1" NPT

Capacities in SCFH of 0.6 S.G. gas; base conditions of 14.7 PSIA and 60° F.

Inlet Pressure (PSIG)	**Orifice Size**			
	1/8"	**3/16"**	**1/4"**	**5/16"**
2	95	220	260	360
3	200	280	380	460
5	230	400	520	600
8	320	550	730	860
10	370	650	850	990
15	480	870	1120	1400
20	580	1110	1420	1610
30	720	1470	1960	2250
40	920	1870	2375	2685
50	1070	2190	2800	3050
60	1220	2580	3155	3530
75	1460	3050	3640	3760
85	1645	3310	3775	4200
100	1895	3670	4150	4260
125	2210	4000	4000	

Inlet Effect	0.01	0.01	0.01	0.01
Lock Up[A] (PSIG)	0.02	0.02	0.03	0.03

Notes:

*Individual regulator performance may vary from data shown.

A. Outlet pressure increase required for lock up.

Do not operate orifice in shaded inlet pressure area.

B31 SERIES LIGHT COMMERCIAL AND INDUSTRIAL REGULATOR, MODEL IMN, IMR, IMV

1 PSIG (69 mbar) Capacity Table (2% Absolute Droop*) 1" Valve Body

Typical Capacity Info.	
Manufacturer	ROOTS Regulators
Type and model	B31 IMNHP, IMRHP, IMrVHP
Regulator	
Inlet size	3/4" NPT
Outlet size	1" NPT

Capacities in SCFH of 0.6 S.G. gas; base conditions of 14.7 PSIA and 60° F.

Inlet Pressure (PSIG)	**Orifice Size**			
	1/8"	**3/16"**	**1/4"**	**5/16"**
2	100	280	370	470
3	210	400	500	600
5	270	520	680	820
8	350	700	940	1120
10	400	810	1080	1310
15	490	1030	1420	1720
20	590	1220	1760	2050
30	750	1570	2290	2685
40	920	1920	2835	3250
50	1070	2205	3355	3725
60	1230	2585	3840	4115
75	1470	3115	4365	4350
85	1645	3455	4390	4440
100	1895	3990	4525	4880
125	2210	4360	4540	

Inlet Effect	0.01	0.01	0.01	0.01
Lock Up [A] (PSIG)	0.02	0.02	0.03	0.03

Notes:

*Individual regulator performance may vary from data shown.

A. Outlet pressure increase required for lock up.

Do not operate orifice in shaded inlet pressure area.

B31 IMRHP RELIEF CURVES

1 PSIG Set Point

Type and model	B31 IMRHP
Spring Color	Red/Gray
Inlet size	3/4" NPT
Outlet size	1" NPT

All test results are reported at a base of 14.7 PSIA at 60º F and with 0.6 S.G. gas.

Regulator set at 1.0 PSIG for relief testing with 40 PSI inlet pressure @ 50 SCFH as per ANSI B109.4.

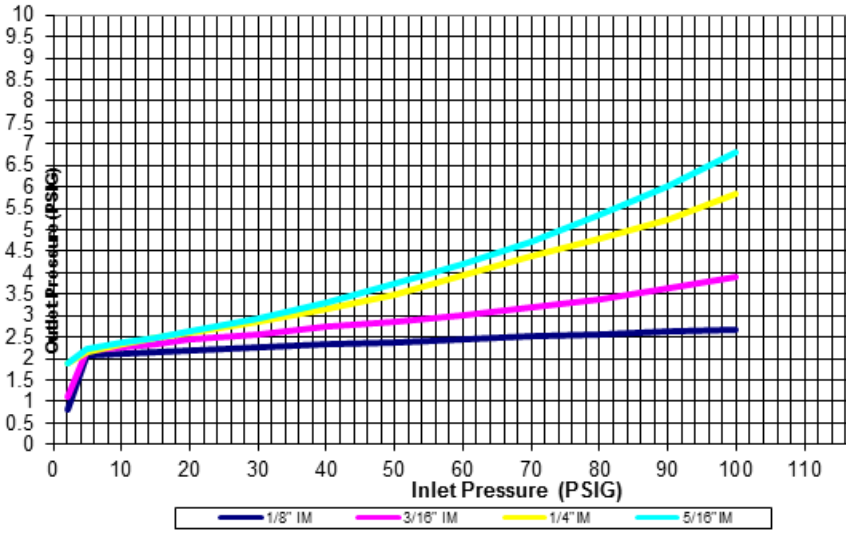

B31 SERIES COMMERCIAL REGULATOR, MODELS IMNHP, IMRHP, AND IMRVHP

2 PSIG (138 mbar) Capacity Table (1% Absolute Droop*) 1" Outlet Valve Body

Typical Capacity Info.	
Manufacturer	ROOTS Regulators
Type and model	B31 IMNHP, IMRHP, IMRVHP
Regulator	
Inlet size	3/4" NPT
Outlet size	1" NPT

Capacities in SCFH of 0.6 S.G. gas; base conditions of 14.7 PSIA and 60° F.

Inlet Pressure (PSIG)	**Orifice Size**			
	1/8"	**3/16"**	**1/4"**	**5/16"**
3	110	165	200	225
5	170	250	320	425
8	225	300	400	475
10	265	400	500	550
15	380	525	680	1080
20	450	625	1050	1250
30	630	925	1430	1825
40	750	1000	1950	2200
50	950	1350	2350	3000
60	1180	1600	2600	3375
75	1380	1800	3250	3800
85	1550	1900	3700	4000
100	1700	2100	4300	4500
125	2000	2300	4600	

Lock Up[A] (PSIG)	0.04	0.05	0.05	0.06

Notes:

*Individual regulator performance may vary from data shown.

A. Outlet pressure increase required for lock up.

Do not operate orifice in shaded inlet pressure area.

B31 SERIES COMMERCIAL REGULATOR, MODELS IMNHP, IMRHP, AND IMRVHP

2 PSIG (138 mbar) Capacity Table (2% Absolute Droop*) 1" Outlet Valve Body

Typical Capacity Info.	
Manufacturer	ROOTS Regulators
Type and model	B31 IMNHP, IMRHP, IMRVHP
Regulator	
Inlet size	3/4" NPT
Outlet size	1" NPT

Capacities in SCFH of 0.6 S.G. gas; base conditions of 14.7 PSIA and 60° F.

Inlet Pressure (PSIG)	**Orifice Size**			
	1/8"	**3/16"**	**1/4"**	**5/16"**
3	140	250	300	350
5	220	400	520	600
8	310	425	650	890
10	360	650	750	1050
15	450	925	1150	1425
20	550	1100	1450	1750
30	710	1400	1980	2400
40	850	1800	2500	3000
50	1050	2100	3000	3700
60	1200	2450	3400	4000
75	1425	2700	3950	4200
85	1600	2850	4200	4475
100	1800	3000	4500	4650
125	2225	3200	4800	

Lock Up[A] (PSIG)	0.04	0.05	0.05	0.06

Notes:

*Individual regulator performance may vary from data shown.

A. Outlet pressure increase required for lock up.

Do not operate orifice in shaded inlet pressure area.

B31 RELIEF CURVES

2 PSIG Set Point

Type and model	B31 IMRHP
Spring Color	White
Inlet size	3/4" NPT
Outlet size	1" NPT

All test results are reported at a base of 14.7 PSIA at 60° F and with 0.6 S.G. gas.

Regulator set at 2.0 PSIG for relief testing with 40 PSI inlet pressure @ 50 SCFH as per ANSI B109.4.

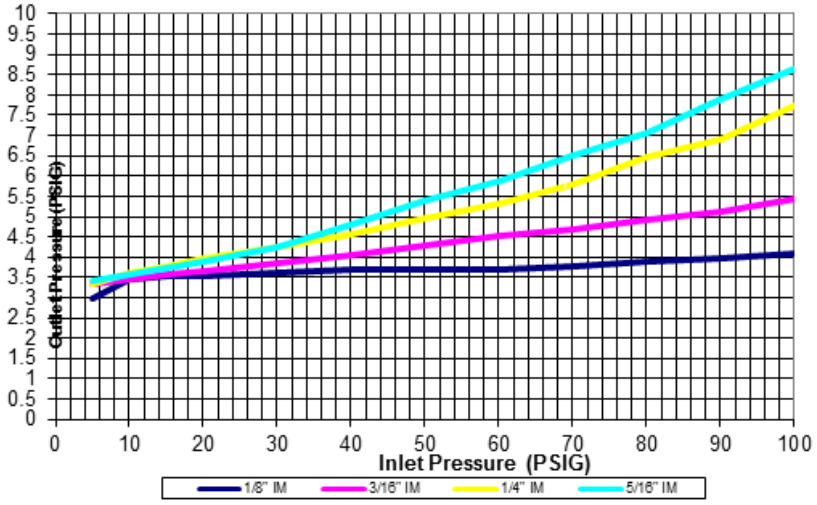

B31 SERIES LIGHT COMMERCIAL AND INDUSTRIAL REGULATOR, MODELS RAS

7" w.c. (17 mbar) Capacity Table (1" Droop*)

Typical Capacity Info.	
Manufacturer	ROOTS Regulators
Type and model	B31RAS

Capacities in SCFH of 0.6 S.G. gas; base conditions of 14.7 PSIA and 60° F.

Inlet Pressure (PSIG)	**Orifice Size**					
	3/16"		**1/4"**		**5/16"**	
	Flow at 1/2" droop	**Shut-off Flow rate**	**Flow at 1" droop**	**Shut-off Flow rate (SCFH)**	**Flow at 1" droop**	**Shut-off Flow rate (SCFH)**
1	137	150	175	180	150	160
2	210	225	270	275	230	240
5	300	325	370	370	425	430
10	500	525	510	510	640	650
15	600	600	825	660	840	850
20	625	650	950	830	1030	1040
25	750	775	1100	960	1180	1190
30	875	900	1050	1100	1310	1320
40	1000	1050	1400	1400	1510	1660
50	1350	1400	1650	1660	1540	1970
60	1400	1450	1750	1790	1590	2250
70	1740	1850	2250	2260	1550	2320
80	1940	2080	2510	2530	1525	2430
90	2150	2300	2775	2800	1410	2520

Notes:

*Individual regulator performance may vary from data shown.

MODEL B31 RAS RELIEF AND LOW PRESSURE SHUT-OFF

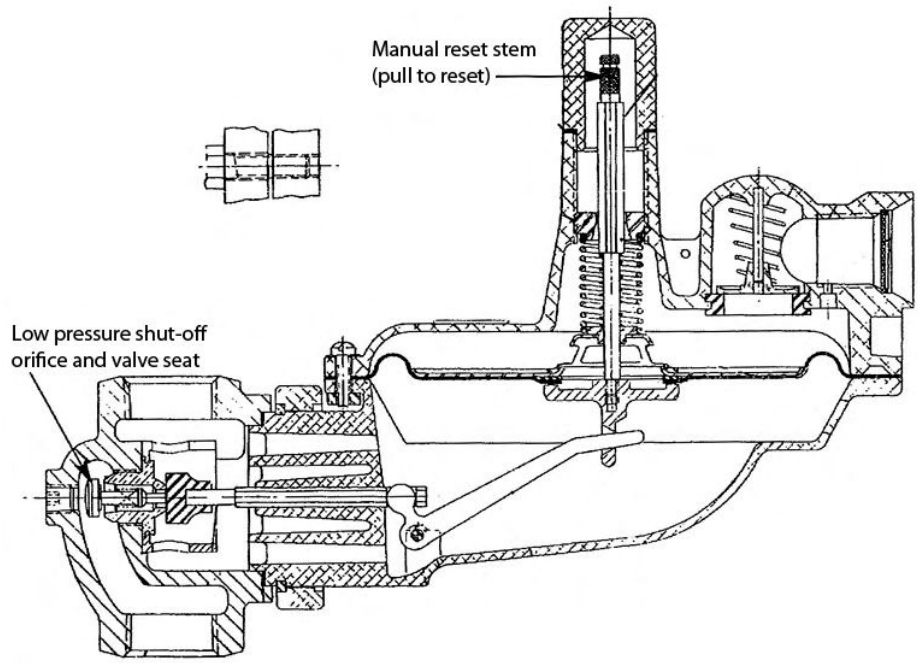

ASSEMBLY POSITIONS

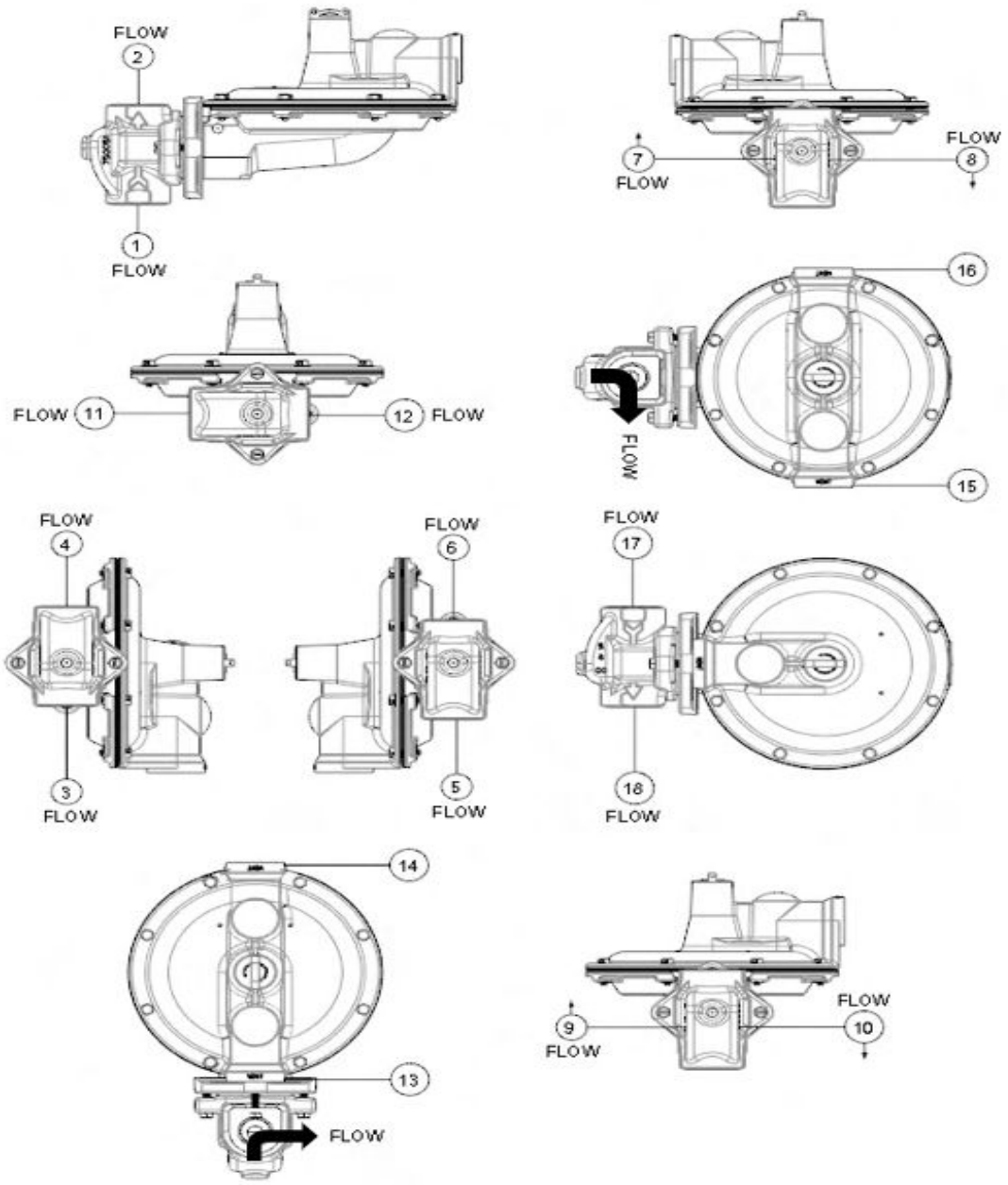

B31 PARTS DIAGRAM

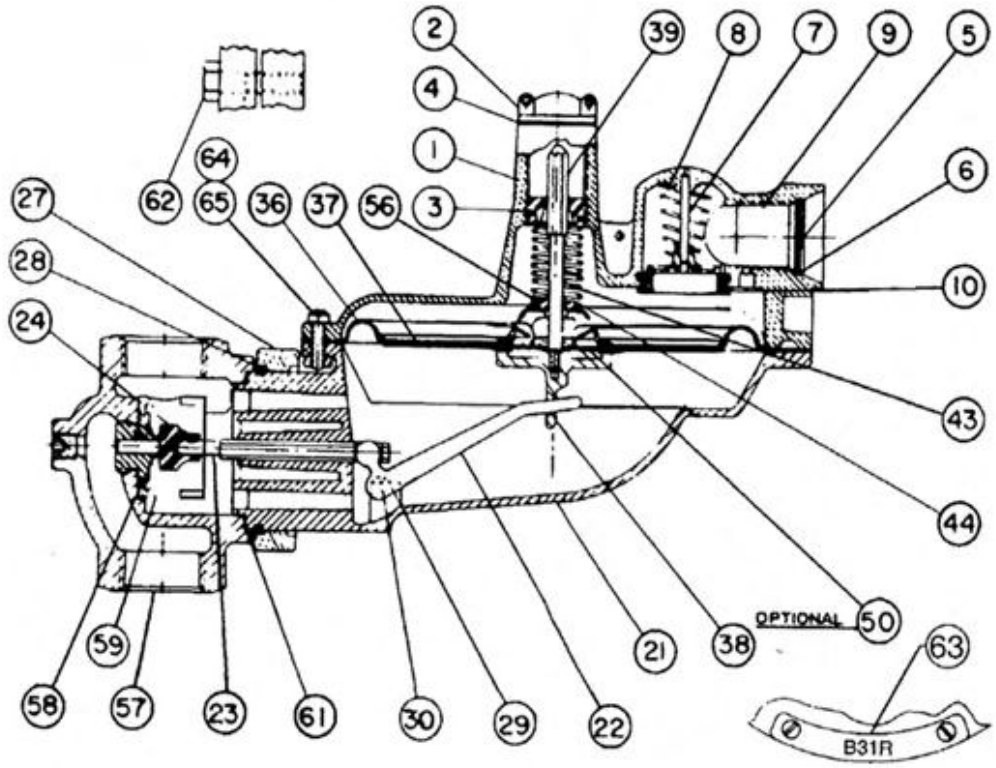

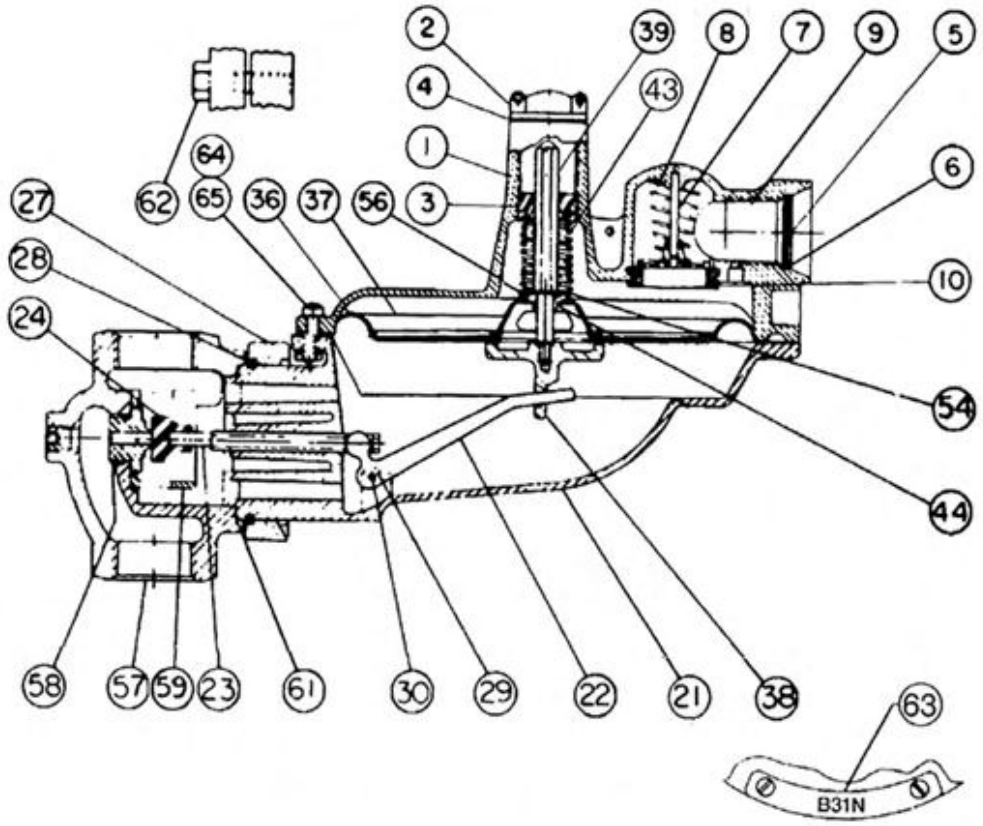

B31 PARTS LIST

Item Number	Part Number	QTY						Description
		N	R	HP	IMN	IMR	IMRV	
	753104SU		1					Vent, 1/4" upper case
	753107SU			1				Vent, 1/4" high pressure upper case
	753127SU		1			1	1	Vent, 3/8" upper case
	753154SU		1			1	1	Vent, 3/4" upper case
	753157SU			1				Vent, 3/4" high pressure upper case
	753234SU		1			1	1	Vent, 1" upper case
	753237SU			1				Vent, 1" high pressure upper case
2	760058-001	1	1		1	1	1	Seal cap standard gray with O-ring
	760062-001			1				Seal cap, high pressure gray with O-ring
	760059-001			1				Seal cap, high pressure red with O-ring
	760066-001	1	1		1	1	1	Seal cap standard green with O-ring
3	760215	1	1		1	1	1	Adjustment screw, Celcon
	760217			1				Adjustment screw, aluminum for HP models
4	765503	1	1	1	1	1	1	O-ring
5								Vent screen, specify vent size
	762935	1	1	1	1	1	1	For all vents except 1", wire mesh
	762933		1	1		1	1	For 1" vent, wire mesh
6								Vent screen retainer ring, specify vent size
	75572701	1	1	1	1	1	1	For all vents except 1"
	75579101		1	1		1	1	For 1" vent
7								Vent valve disc pin, specify vent size
	754806	1	1	1	1	1	1	For all vents except 1"
	75483401		1	1		1	1	For 1" vent
8	762601	1	1	1	1	1	1	Vent valve spring
9	765181	1	1	1	1	1	1	Vent valve disc
10	765685	1	1	1	1	1	1	Vent valve seat
21								Lower diaphragm case, please specify
	752104SU	1	1	1				5.5:1 Ratio, 3/4" & 1" valve bodies
	752124SU	1	1	1				4:1 Ratio, 1-1/4" valve bodies
	752324SU				1	1	1	Lower diaphragm case, 4:1 ratio IM
22								Valve linkage lever, specify
	761235	1	1	1				Lever 5.5:1 Ratio
	761231	1	1	1				Lever 4:1 Ratio
	761241				1	1	1	Lever 4:1 ratio IM
23	754021	1	1	1	1	1	1	Valve stem, aluminum
24	765021	1	1	1				Valve seat, Buna-N 75 D. Durometer
	765025	1	1	1				Valve seat, Silicone (less than 20°F)
	765027				1	1	1	Valve seat, Buna-N 85-95 Durometer (hard) IM
	765011	1	1	1				Valve seat, use with 1/2" x 9/16" orifice, 80 Durometer
25	761711				1	1	1	Deflector ring
27	751913SU	1	1	1	1	1	1	Valve body retainer plate

Item Number	Part Number	QTY						Description
		N	R	HP	IMN	IMR	IMRV	
28	755725	1	1	1	1	1	1	Retainer plate snap ring
29	755141	2	2	2	2	2	2	Valve linkage pin screw, 8-32 x 5/16
30	754831	1	1	1	1	1	1	Valve linkage pin
36	766130	1	1	1	1	1	1	Diaphragm with O-ring seal
37	76102601	1	1	1	1	1	1	Upper diaphragm plate
38	756043	1	1	1	1	1	1	Lower diaphragm plate
39	754303	1			1			Stop stem, N versions only
	754301		1	1		1	1	Stop stem, R versions only
43	762101		1	1		1	1	Relief spring, 7" w.c. above set
44	75490601	1	1	1	1	1	1	Stop stem guide brushing
54	755801	1			1			Diaphragm plate washer
56		1	1		1	1	1	Adjustment spring, please specify
	762111							Brown 4.5-5.5 w.c.
	762117							D. Green 5.0-7.0 w.c.
	762119							L. Green 5.5-8.0 w.c.
	762123							Black 7.0-11.0 w.c.
	762127							Blue 8.0-12.0 w.c.
	762129							Silver 11.0-16.0 w.c.
				1				Adjustment spring, please specify
	762018							Red/blue .75-1.1 PSIG
	762025							Red/gray 0.5-0.9 PSIG
	762131							Yellow 1.1-1.5 PSIG
	762135							Red 1.3-2.0 PSIG
	762137							White 1.75-2.5 PSIG
57		1	1	1	1	1	1	Valve body, please specify type and size
								Straight
	750054SU							3/4" x 3/4"
	750057SU							3/4" x 3/4"with 1/8" NPT pipe plug
	750063SU							3/4" x 1"
	750065SU							3/4" x 1" with 1/8" NPT pipe plug
	750072SU							1" x 1"
	750075SU							1" x 1" with 1/8" NPT pipe plug
	750104SU							3/4" x 1-1/4"
	750107SU							3/4" x 1-1/4" with 1/8" NPT pipe plug
	750113SU							1" x 1-1/4"
	750116SU							1" x 1-1/4" with 1/8" NPT pipe plug
	750128SU							1-1/4" x 1-1/4"
	750131SU							1-1/4" x 1-1/4" with 1/8" NPT pipe plug
								90° Angle body
	750042SU							3/4" x 3/4"
	750044SU							3/4" x 1"
	750046SU							1" x 1"

Item Number	Part Number	QTY						Description
		N	R	HP	IMN	IMR	IMRV	
58		1	1	1	1	1	1	Orifice, aluminum specify size (for brass orifice, additional charge)
	757213							1/8″ diameter
	757219							3/16″ diameter
	757225							1/4″ diameter
	757231							5/16″ diameter
	757237							3/8″ diameter
	757451							1/2″ diameter
59	761753	1	1	1	1	1	1	Loading ring
61	765753	1	1	1	1	1	1	Valve body gasket
62	755375	2	2	2	2	2	2	Retainer plate screw, Hex head. Cad. plate steel, 5/16″- 18x1-1/8″ Lg.
63	769250	1	1	1	1	1	1	Standard badge
	769151			1				Blank 2-hole badge (specify information to be stamped)
	769051			1				Blank 1-hole badge (specify information to be stamped)
64	755304-001	8	8	8	8	8	8	Case screw, Hex head, Dacromet coated, 1/4″-20
65	755513-001	8	8	8	8	8	8	Case screw nut, square, steel 1/4″-20
94	755785				1	1	1	Deflector retaining ring, circular Int.

Torque Specifications	
Margin screws	27-30 in. lbs.
Retainer plate screws	85-115 in. lbs.
Orifice, standard	450-500 in. lbs.
Orifice, IM	300 in. lbs.

Special Tools	
799051	Spring adjustment wrench
799017	Orifice socket

IM ORIFICE ASSEMBLY SCHEMATIC

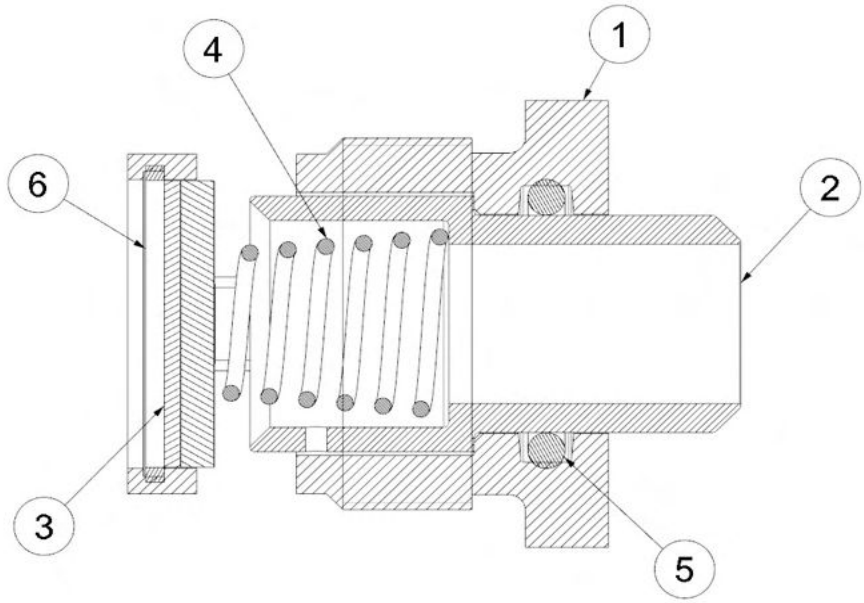

Item Number	Part No.	Internal Monitor (IM) Orifice Assembly Numbers								Description
		759003	759007	759011	759015	759001	759005	759009	759013	
1	757001	1	1	1	1	1	1	1	1	Stationary orifice
2A	757015					1				1/8” diameter, sliding orifice
2A	757017						1			3/16” diameter, sliding orifice
2A	757019							1		1/4” diameter, sliding orifice
2A	757011								1	5/16” diameter, sliding orifice
2B	757021	1								1/8” diameter, sliding orifice with vent hole
2B	757023		1							3/16” diameter, sliding orifice with vent hole
2B	757025			1						1/4” diameter, sliding orifice with vent hole
2B	757013				1					5/16” diameter, sliding orifice with vent hole
3	759022	1	1	1	1	1	1	1	1	Anchor plate
4	762611	1	1	1	1	1	1	1	1	Cut off spring
5	765519	1	1	1	1	1	1	1	1	O-ring
6	755733	1	1	1	1	1	1	1	1	Retaining ring

VENT LINES FOR REGULATORS

When constructing vent lines to be attached to regulators installed indoors, follow a few basic rules:

a. Never use pipe sizes smaller than the vent size; smaller pipe sizes restrict the gas flow. If a long gas run must be used, ROOTS Regulators advises increasing the pipe one nominal size every ten feet to keep the flow restriction as low as possible.

b. Keep the vent line length as short as possible to minimize the restriction and reduce the vent's tendency to cause regulator pulsation.

c. Support the vent pipe to eliminate strain on the regulator diaphragm case.

d. Always point outdoor vent pipes in the downward position to reduce the possibility of rain, snow, sleet, and other moisture entering the pipe. Install a bug screen in the end of the pipe.

e. Do not locate the vent line terminus near windows, fans, or other ventilation equipment. See the installation instructions furnished with the regulator.

f. Adhere to all applicable codes and regulations.

g. If your vent pipe causes regulator pulsation, consult your sales representative or manufacturer.

h. ROOTS Regulators strongly recommends running a separate vent line for each regulator. Headers with various installed devices can cause regulator malfunction.

Caution Ensure the end of the vent line is away from ANY potential ignition sources. It is the installer's responsibility to ensure the vent line is exhausting to a safe environment.

INSTALLATION

Warning ROOTS Regulators does not endorse or warrant the completeness or accuracy of any third party regulator installation procedures or practices, unless otherwise provided in writing by ROOTS Regulators. Follow your company's standard operating procedures regarding the use of personal protection equipment (PPE). Adhere to guidelines issued by your company in addition to those given in this document when installing regulators.

a. Remove all shipping plugs from the regulator inlet, outlet, and vent before installation.

b. Verify the piping interior and regulator inlet and outlet are clean and free of dirt, pipe dope, and other debris. Dirt and other foreign materials entering the regulator can cause a loss of pressure control.

c. Apply pipe joint sealant to the male pipe threads. Do not use pipe joint material on the regulator's female threads. Joint sealant could become lodged in the regulator and cause a loss of pressure control.

d. Gas must flow through the regulator's valve body in the direction cast on the regulator body. Gas flowing in the wrong direction can overpressure and cause damage to the regulator.

e. The pilot diaphragm casing can be mounted in any position relative to the body through a full 360° angle at 90° increments.

f. When the regulator is installed OUTDOORS, the vent must always be positioned so that rain, snow, moisture or foreign particles cannot enter the vent opening. ROOTS Regulators recommends positioning the pilot vent downward to avoid entry of water or other matter which could interfere with the proper operation of the regulator. The vent should be located away from building eaves, window openings, building air intakes and above the expected snow level at the site. The vent opening should be inspected periodically to insure it does not become blocked by foreign material as outlined in DOT PHMSA-RSPA-2004-19856.

g. When the regulator is installed INDOORS, the vent must be piped to the outside atmosphere using the shortest length of pipe, the fewest possible pipe elbows, and a pipe diameter as large as the vent size or larger. USING VENT PIPE SMALLER THAN THE VENT CONNECTION LIMITS THE REGULATOR'S INTERNAL RELIEF VALVE CAPACITY. The outlet end of the pipe must be protected from moisture and the entrance of foreign particles. The regulator should be specified by the user with the size vent and pipe threads desired to make the vent pipe connection.

START-UP PROCEDURE

1. Mount a pressure gauge downstream of the regulator to monitor the downstream pressure.
2. With the downstream pressure valve closed, slowly open the inlet valve. The outlet pressure should rise to slightly more than the set-point. Verify there are no leaks and all connections are tight.
3. The regulator was pre-set at the factory to match order specifications. If necessary, adjust the outlet pressure by removing the seal cap on the top of the pilot spring housing and adjusting the ferrule or screw inside the pilot spring housing using a large flat-head screwdriver. With a small amount of gas flowing through the regulator, rotate the pilot ferrule clockwise to raise the outlet pressure or counter-clockwise to lower the outlet pressure.
4. Replace the seal cap and check for leaks after the desired outlet pressure is achieved.

The regulator is ready for operation.

SAFETY WARNING

This product, as of the date of manufacture, is designed and tested to conform to all governmental and industry safety standards as they may apply to the manufacturer. The purchaser/user of this product must comply with all fire control, building codes, and other safety regulations governing the application, installation, operation, and general use of this regulator to avoid leaking gas hazards resulting from improper installation, startup or use of this product.

ROOTS Regulators strongly recommends installation by a qualified professional and periodic inspection of pressure regulators (inspections may be required by local applicable codes or regulations).

Inspections should include checking for gas quality, cycle numbers, external environmental changes, and operating conditions that impact wear on the regulator's moving parts. To ensure safe and efficient operation of this product, replace worn or damaged parts found during inspection.

Limited Warranty

ROOTS Regulators are subject to the terms and conditions of the Natural Gas Solutions North America, LLC General Terms & Conditions For Sale of Products, Parts and Services, and no other terms shall apply, unless agreed upon by the parties in writing. The Natural Gas Solutions North America, LLC General Terms & Conditions For Sale of Products, Parts and Services can be found on the Dresser Utility website: dresserutility.com/forms-questionnaires-and-terms-conditions-sale.

Ordering Information

Specify:

1. Inlet and outlet connection size and type
2. Model number
3. Outlet pressure desired
4. Pilot needed
5. Inlet pressure range
6. Type of gas and maximum capacity required
7. Assembly position number (see chart below)
8. Special requirements such as tagging, ⅛" pipe plug tap, seal wire, etc.

ROOTS Regulator + ROOTS Meter Compatibility

Small	Regular	Large
3M175	*D-Series*	*7M175*

ROOTS Regulators

16240 Port Northwest Drive
Houston, TX 77041T:
1-800-521-1114
F: 1-800-335-5224

© 2025 Natural Gas Solutions North America, LLC – All rights reserved. Dresser Utility Solutions reserves the right to make changes in specifications and features shown herein, or discontinue the product described at any time without notice or obligation. Contact your Dresser Utility Solutions representative for the most current information. The Dresser Logo and all Trademarks containing the term "Dresser" are the property of Dresser, LLC, a subsidiary of Baker Hughes.

DRESSER UTILITY SOLUTIONS
www.dresserutility.com