DRESSER UTILITY SOLUTIONS

ROOTS REGULATORS

B34 Series Regulator

Commercial and Industrial Regulator

Appropriate for many commercial and industrial uses such as gas engines, burners, furnaces and boilers. The rapid response of the B34 is particularly well-suited for mid-range applications where quick on/off loads cause shock problems.

Model Description

» B34R
The B34R is the internal relief version of the B34 series. This model features an adjustable loading ring for controlled boost at higher flows and a 1" internal relief valve.

» B34N
The B34N is a spring-loaded, self-operated regulator with no internal relief, an adjustable loading ring for controlled boost at higher flows, and a precision breather opening to ensure proper stability for all conditions. This regulator can be used on low or intermediate inlet pressures where an internal relief or other type of over-pressure protection device is not required.

» B34IMR
The B34 IM regulator is a single valve body regulator with built-in monitor operation. It features the safety advantage of a second gas tight lock-up seat if the normal orifice face and valve seat fail to produce bubble tight lock up. Designed specifically to comply with DOT OPS 192.197 paragraph B

» B34MN
The B34MN is a non-relief type monitor regulator equipped with a closed-throat, downstream control line and an O-ring seal on the valve body stem through the throat to assure positive downstream control when installed ahead of a downstream regulator. Used in a series monitoring installation as the upstream regulator, this unit gives customers an operating device that assumes control over an operating regulator when failure is sensed by the control line of the monitor. This series system assures maximum safety with uninterrupted service. The monitor regulator is set to take over control from the operating regulator with only a slight increase in outlet pressure.

» B34IMROPCO
The B34 IMROPCO regulator is a single valve body regulator with built-in monitor operation and overpressure shut off. It features the already established B34IM regulator 3 forms of overpressure protection: the safety advantage of a second gas tight lock-up seat if the normal orifice face and valve seat fail to produce bubble tight lock up, an internal built-in relief mechanism and an overpressure shut off for abnormal failure modes.

» B34IMRVOPCO
The B34 IMRVOPCO regulator has all of the features of the B34IMROPCO with an additional built-in signal for monitor lock up.

» B34IMNOPCO
The B34IMNOPCO is a non-relief version for applications where relief is not an option.

Features

» Interchangeable brass orifice
» 78 in^2 of diaphragm area
» Spring-loaded internal relief valve assembly
» Field interchangeable adjustment spring
» Controlled size breather orifice eliminates pulsation and provides normal action at low flows
» Wide range of valve body sizes including NPT and flange connections

Benefits

» ANSI Z21.80/CSA 6.22 Class I & II certified
» Economical
» Protects equipment from shock damage
» Large 12" diaphragm for better outlet pressure control
» Unmatched overpressure protection with internal monitor, internal relief and opco options.

B34 SERIES COMMERCIAL REGULATOR SHIPPING WEIGHT

One regulator per box Box weight: 24 lbs.

B34 DIMENSIONS (INCHES)

Valve Body	A	B	C	D	E	F	G	H	R	S	T
1-1/4, 1-1/2, or 2 NPT	5-3/4	2-7/8	8-11/16	12-3/4	4-5/16	10	2-3/16	4-1/2	2-1/4	5-19/32	5-7/32
2 Flanged	10	5	8-11/16	12-3/4	4-5/16	10	2-3/16	5-1/2	3-1/4	5-19/32	5-7/32
3 Flanged	10	5	8-11/16	12-3/4	4-5/16	10	2-3/16	5-1/2	3-1/4	x	x

▶ Screwed Valve Body

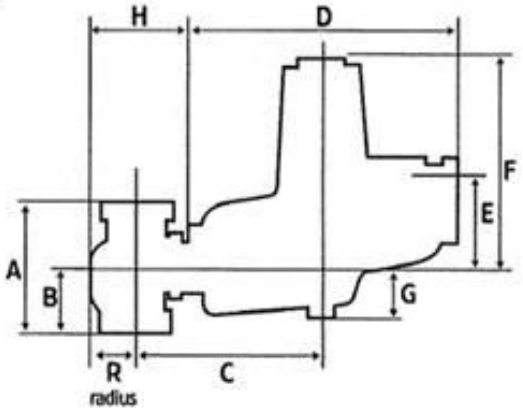

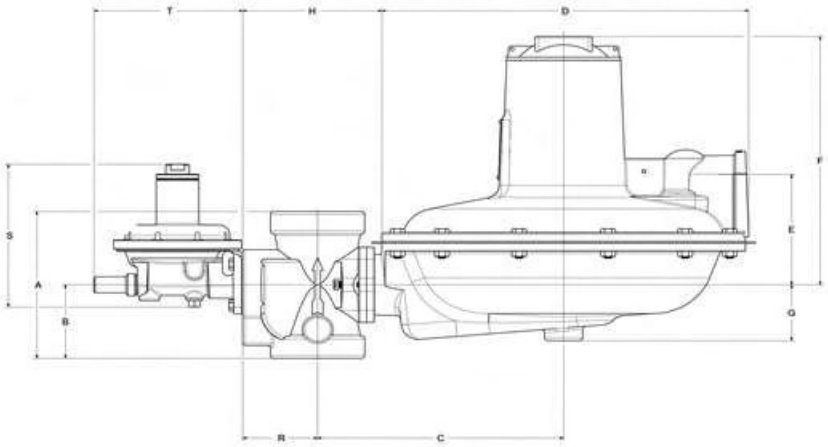

▶ Flanged Valve Body

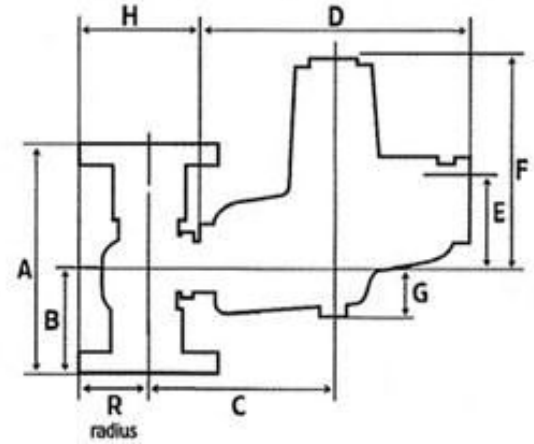

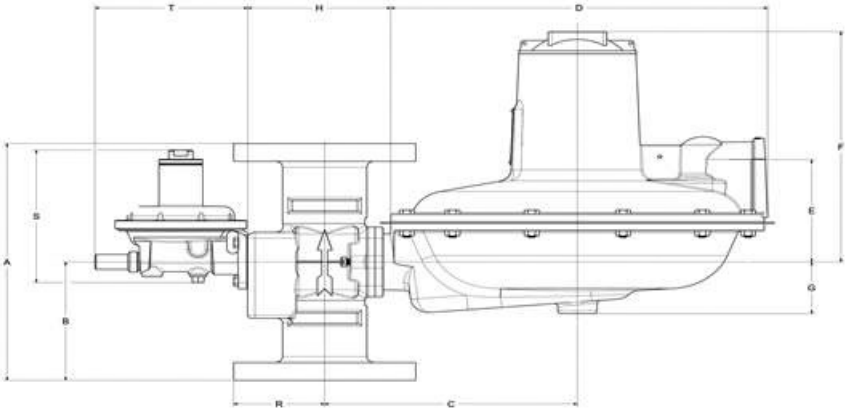

SPRING DATA, SPRING COLOR OUTLET PRESSURE RANGE*

Models B34 N, R, M, D

Colors	Part Number	Outlet Pressure Range
Orange	762341	3.0" w.c. - 5.0" w.c.
Brown	762351	4.0" w.c. - 6.5" w.c.
Green	762353	5.0" w.c. - 8.0" w.c.
Black	762355	6.5" w.c. - 13.0" w.c.
Purple	765365	9.1" w.c. - 20.8" w.c.
Blue	762357	15.0" w.c. - 28.0" w.c.
Silver	762359	1.0 PSIG - 2.0 PSIG
Yellow	762361	2.0 PSIG - 4.5 PSIG
Red-nested	762671	4.0 PSIG - 5.5 PSIG
White-nested	762673	4.8 PSIG - 7.3 PSIG

*Note Ranges are approximations, please contact manufacturer to obtain the best spring for your application.

ORIFICE DATA, WIDE OPEN FLOW COEFFICIENTS AND MAXIMUM PRESSURES

Orifice Size (inches)	K-Factor	Maximum Operating Inlet (PSIG)			Maximum Emergency Inlet Pressure (PSIG)	Maximum Emergency Outlet Pressure (PSIG)
		in. w.c. Delivery N & R Models	in. w.c. Delivery D & M Models	PSIG Delivery All Models	All Deliveries All Models	All Deliveries All Models
1/4	125	125	175	175	300	60
1/4 x 3/8	125	125	125	175	300	
3/8	290	125	125	175	300	
3/8 x 1/2	305	125	125	150	300	
1/2	500	75	125	150	300	
1/2 x 5/8	550	60	125	150	300	
5/8	700	60	125	150	300	
5/8 x 3/4	750	60	100	150	300	
3/4	900	60	100	150	300	
3/4 x 7/8	950	60	100	150	230	
7/8	1200	60	100	150	230	
7/8 x 1	1245	25	100	150	230	

OPERATING TEMPERATURE RANGE

- -20°F to 150°F
- Silicone valve seats available for applications below -20°F

ADDITIONAL SPECIFICATIONS

Available Vent Sizes	1"
Loading Ring Position	M & D Models - 0° R & N Models for <1 PSIG set point - 21°; >1 PSIG set point - 0°
Other Available Options	Seal wire to indicate unapproved tampering
	1/8" pipe plug tap on upstream side of valve body

COMPLIANCE

The B34R (internal relief model) compliance with ANSI Z21.80, Line Pressure Regulators

Model B34R used with a 1″ vent connection is compliant with ANSI Z21.80 in the configurations noted and shown in the following tables:

With inlet pressures up to 2 PSIG, the B34R is compliant in any configuration.

With inlet pressures up to 5 PSIG

Orifice Size	Set Point	Maximum Vent Line Length (ft.)*	Number of Elbows**
1/4″	Up to 1 PSIG	50	4 or less
1/4″ x 3/8″	Up to 1 PSIG	50	4 or less
3/8″	Up to 14″ w.c.	50	4 or less
3/8″ x 1/2″	Up to 14″ w.c.	50	4 or less
1/2″	Up to 14″ w.c.	25	4 or less
1/2″ x 5/8″	Up to 14″ w.c.	10	4 or less
5/8″	Up to 14″ w.c.	10	4 or less
5/8″ x 3/4″	Up to 14″ w.c.	No vent line	No vent line
3/4″	Up to 14″ w.c.	No vent line	No vent line

*Clean 1″ black steel pipe

**For each elbow greater than 4 elbows, subtract 2.6 ft. from the maximum vent line length.

With inlet pressures up to 10 PSIG

Orifice Size	Set Point	Maximum Vent Line Length (ft.)*	Number of Elbows**
1/4″	Up to 1 PSIG	50	4 or less
1/4″ x 3/8″	Up to 1 PSIG	50	4 or less
3/8″	Up to 14″ w.c.	30	4 or less
3/8″ x 1/2″	Up to 14″ w.c.	25	4 or less
1/2″	Up to 14″ w.c.	No vent line	No vent line

*Clean 1″ black steel pipe

**For each elbow greater than 4 elbows, subtract 2.6 ft. from the maximum vent line length.

CONSTRUCTION

ROOTS Regulators takes pride in delivering American made products with the utmost concern for safety, quality, and customer satisfaction.

Construction materials

Construction materials	
Valve body	High tensile strength cast iron
Orifice	Brass
Valve seat	Buna-N or silicone (for temperatures below -20°F)
Valve stem	Plated Steel
Lever pin	Stainless steel
Lever	Zinc and dichromate plated steel
Stem Guide	Stainless Steel
Upper diaphragm plate	Zinc and dichromate plated steel
Lower diaphragm plate	Die cast aluminum
Diaphragm	Buna-N and nylon
Vent valve/seat	Delrin/Buna-N
Vent screen	Stainless steel
Adjustment ferrule	Die cast aluminum
Seal cap	Die cast aluminum
Diaphragm case	Die cast aluminum

VALVE BODY SIZES (INCHES)

Inlet	Outlet	Screwed	Flanged
1-1/4	1-1/4	X	---
1-1/4	1-1/2	X	---
1-1/4	2	X	---
1-1/2	1-1/2	X	---
1-1/2	2	X	---
2	2	X	X
3	3	---	X

Note: X indicates that the valve body is available in that configuration.

B34 IM VALVE BODY SIZES (INCHES)

Inlet	Outlet	Screwed	Flanged
1-1/4	1-1/4	X	--
1-1/4	1-1/2	X	---
1-1/4	2	X	---
1-1/2	1-1/2	X	---
1-1/2	2	X	---
2	2	X	X
3	3	---	X*

*With 2" bore

Note: X indicates that the valve body is available in that configuration

B34IMOPCO VALVE BODY SIZES

Inlet	Outlet	Screwed	Flanged
1-1/2	1-1/2	X	---
2	2	X	X

Note: X indicates that the valve body is available in that configuration.

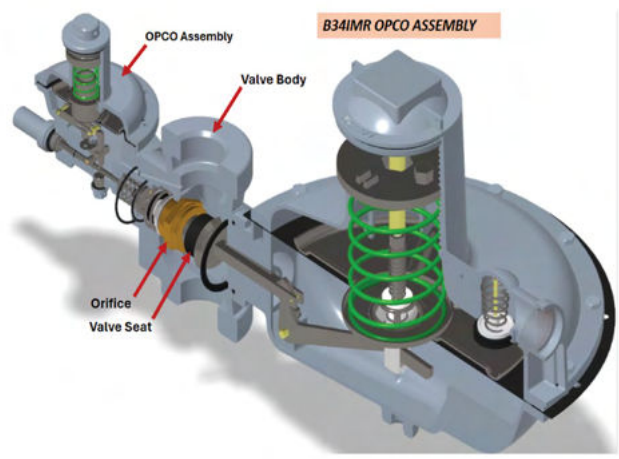

CORRECTION FACTORS FOR NON-NATURAL GAS APPLICATIONS

The B34 may be used to control gases other than natural gas. To determine the capacity for gases other than natural gas, multiply the values within the capacity tables by a correction factor. The table below lists the correction factors for some of the more common gases:

Gas Type	Specific Gravity	Correction Factor (CF)
Air	1.00	0.77
Butane	2.01	0.55
Carbon Dioxide (Dry)	1.52	0.63
Carbon Monoxide (Dry)	0.97	0.79
Natural Gas	0.60	1.00
Nitrogen	0.97	0.79
Propane	1.53	0.63
Propane-Air Mix	1.20	0.71

To calculate the correction factor for gases not listed in the table above, use the gases' specific gravity and insert it in the formula listed below:

Correction Factor (CF) = $\sqrt{\frac{SG_1}{SG_2}}$

Where:

SG1 = Specific gravity of the gas in which the capacity is published.

SG2 = Specific gravity of the gas to be controlled.

Wide Open Flow Calculations

For wide-open orifice flow calculations use the following equations:

For: $\frac{P_1}{P_2} < 1.89$ use: $Q = K\sqrt{P_2(P_1 - P_2)}$ For: $\frac{P_1}{P_2} > 1.89$ use: $Q = \frac{KP_1}{2}$

Where: P1 = Absolute Inlet Pressure (PSIA) P2 = Absolute Outlet Pressure (PSIA)

Q = Flow Rate (SCFH) K = Orifice Coefficient (SCFH/PSI)

B34 SERIES COMMERCIAL REGULATOR, MODELS N, R, M, AND D

7" w.c. (17.5 mbar) Capacity Table (1" w.c. Droop*) 2"Outlet

Capacities in SCFH of 0.6 S.G. gas; base conditions of 14.7 PSIA and 60Â° F.

Typical Capacity Info.	
Manufacturer	ROOTS Regulators
Type and model	B34R
Regulator	
Inlet size:	2″ NPT
Outlet size:	2″ NPT
Position	11
Spring	Green

Inlet Pressure		**Orifice Size**									
PSIG	**Bar**	**1/4”**		**1/4” x 3/8”**		**3/8”**		**3/8” x 1/2”**		**1/2”**	
8” w.c.	0.020									325	(9.2)
10” w.c.	0.025					325	(9.2)	435	(12.3)	500	(14.2)
12” w.c.	0.030			250	(7.1)	400	(11.3)	540	(15.3)	625	(17.7)
14” w.c.	0.035	225	(6.4)	300	(8.5)	475	(13.5)	610	(17.3)	750	(21.2)
16” w.c.	0.040	250	(7.1)	350	(9.9)	550	(15.6)	700	(19.8)	800	(22.7)
18” w.c.	0.045	275	(7.8)	375	(10.6)	600	(17.0)	740	(21.0)	900	(25.5)
21” w.c.	0.052	300	(8.5)	400	(11.3)	700	(19.8)	800	(22.7)	1050	(29.7)
24” w.c.	0.060	350	(9.9)	400	(11.3)	800	(22.7)	890	(25.2)	1200	(34.0)
1	0.069	400	(11.3)	400	(11.3)	875	(24.8)	1000	(28.3)	1300	(36.8)
2	0.138	575	(16.3)	575	(16.3)	1300	(36.8)	1500	(42.5)	1900	(53.8)
3	0.207	775	(21.9)	800	(22.7)	1700	(48.1)	2000	(56.6)	2000	(56.6)
5	0.345	1000	(28.3)	1100	(31.1)	2000	(56.6)	2400	(68.0)	2400	(68.0)
10	0.69	1500	(42.5)	1700	(48.1)	3400	(96.3)	3500	(99.1)	3500	(99.1)
20	1.38	2150	(60.9)	2300	(65.1)	5000	(141.6)	5000	(141.6)	8500	(240.7)
30	2.07	2750	(77.9)	2900	(82.1)	6500	(184.1)	6500	(184.1)	10000	(283.2)
40	2.76	3450	(97.7)	3550	(100.5)	8000	(226.5)	8000	(226.5)	10000	(283.2)
50	3.45	3800	(107.6)	4100	(116.1)	9200	(260.5)	9200	(260.5)	10000	(283.2)
60	4.14	4500	(127.4)	5000	(141.6)	9500	(269.0)	10000	(283.2)	10000	(283.2)
70	4.83	4700	(133.1)	5100	(144.4)	10000	(283.2)	10000	(283.2)	10000	(283.2)
80	5.52	4900	(138.8)	6000	(169.9)	10000	(283.2)				
90	6.21	6800	(192.6)	7000	(198.2)	10000	(283.2)				
100	6.90	7400	(209.5)	7800	(220.9)	10000	(283.2)				
125	8.63	8800	(249.2)	9000	(252.0)	10000	(283.2)				

Inlet Effect A in. w.c. (mbar)	0.3 (0.8)	0.3 (0.8)	0.3 (0.8)	0.3 (0.8)	0.3 (0.8)
Lock Up [B] in. w.c. (mbar)	0.3 (0.8)	0.3 (0.8)	0.3 (0.8)	0.5 (1.3)	0.5 (1.3)

Notes:

*Individual regulator performance may vary from data shown.

A. Change in outlet pressure for 10 PSIG inlet pressure change.

B. Outlet pressure increase required for lock up.

Do not operate orifice in shaded inlet pressure area.

Inlet pressure is too low to deliver 7″ w.c. (17.5 mbar).

7″ w.c. (17.5 mbar) Capacity Table (1″ Droop) 2″ Outlet (continued)

Capacities in SCFH of 0.6 S.G. gas; base conditions of 14.7 PSIA and 60º F.

Inlet Pressure		Orifice Size													
PSIG	Bar	1/2″ x 5/8″		5/8″		5/8″ x 3/4″		3/4″		3/4″ x 7/8″		7/8″		7/8″ x 1″	
8″ w.c.	0.020	400	(11.3)	500	(14.2)	635	(18.0)	675	(19.1)	725	(20.5)	850	(24.1)	900	(25.5)
10″ w.c.	0.025	650	(18.4)	750	(21.2)	850	(24.1)	900	(25.5)	1050	(29.7)	1150	(32.6)	1225	(34.7)
12″ w.c	.0.030	800	(22.7)	800	(22.7)	950	(26.9)	1050	(29.7)	1100	(31.1)	1250	(35.4)	1425	(40.4)
14″ w.c.	0.035	900	(25.2)	1175	(32.9)	1200	(33.6)	1250	(35.0)	1525	(42.7)	1700	(47.6)	1900	(53.2)
16″ w.c.	0.040	1050	(29.4)	1175	(32.9)	1350	(37.8)	1550	(43.4)	1700	(47.6)	1950	(54.6)	2050	(57.4)
18″ w.c.	0.045	1150	(32.2)	1275	(35.7)	1575	(44.1)	1750	49.0)	1825	(51.1)	2050	(57.4)	2350	(65.8)
21″ w.c.	0.052	1350	(37.8)	1500	(42.5)	1750	(49.0)	1800	(50.4)	2100	(58.8)	2350	(65.8)	2700	(75.6)
24″ w.c.	0.060	1450	(41.1)	1700	(48.1)	1950	(55.2)	2100	(59.9)	2250	(63.7)	2700	(76.5)	3000	(85.0)
1	0.069	1500	(42.5)	2200	(62.3)	2200	(62.3)	2300	(65.1)	2400	(68.0)	2700	(76.5)	3200	(90.6)
2	0.138	2000	(56.6)	3000	(85.4)	3300	(94.3)	3700	(104.8)	4000	(113.3)	4500	(127.4)	4700	(133.1)
3	0.207	2700	(76.5)	4000	(113.3)	4200	(11896)	4400	(124.6)	4600	(130.3)	5200	(147.2)	6000	(170.0)
5	0.345	4000	(113.3)	5100	(144.4)	5700	(161.4)	6800	(192.6)	7000	(198.2)	7500	(212.4)	8000	(226.5)
10	0.69	5700	(161.4)	8500	(240.7)	9000	(254.9)	10000	(283.2)	10000	(283.2)	10000	(283.2)	10000	(283.2)
20	1.38	8500	(240.7)	10000	(283.2)	10000	(283.2)	10000	(283.2)	10000	(283.2)	10000	(283.2)	10000	(283.2)
30	2.07	10000	(283.2)	10000	(283.2)	10000	(283.2)	10000	(283.2)	10000	(283.2)	10000	(283.2)		
40	2.76	10000	(283.2)	10000	(283.2)	10000	(283.2)	10000	(283.2)	10000	(283.2)	10000	(283.2)		
50	3.45	10000	(283.2)	10000	(283.2)	10000	(283.2)	10000	(283.2)	10000	(283.2)	10000	(283.2)		
60	4.14	10000	(283.2)	10000	(283.2)	10000	(283.2)	10000	(283.2)	10000	(283.2)				
70	4.83														
80	5.52														
90	6.21														
100	6.90														
125	8.63														

Inlet Effect[A] in. w.c. (mbar)	0.3 (0.8)	0.4 (1.0)	0.5 (1.3)	0.5 (1.3)	0.5 (1.3)	0.6 (1.5)	0.6 (1.5)
Lock Up[B] in w.c. (mbar)	0.6 (1.5)	1.0 (2.5)	1.0 (2.5)	1.1 (2.8)	1.1 (2.8)	1.1 (2.8)	1.1 (2.8)

Notes:

*Individual regulator performance may vary from data shown.

A. Change in outlet pressure for 10 PSIG inlet pressure change.

B. Outlet pressure increase required for lock up.

Do not operate orifice in shaded inlet pressure area.

B34 PERFORMANCE CURVES

7" w.c. Set Point

Type and model	B34R
Inlet size:	2" NPT
Outlet size:	2" NPT
Orifice size:	1/4" x 3/8"
Spring	Green

All test results are reported at a base of 14.7 PSIA and 60º F. and with 0.6 S.G. gas.

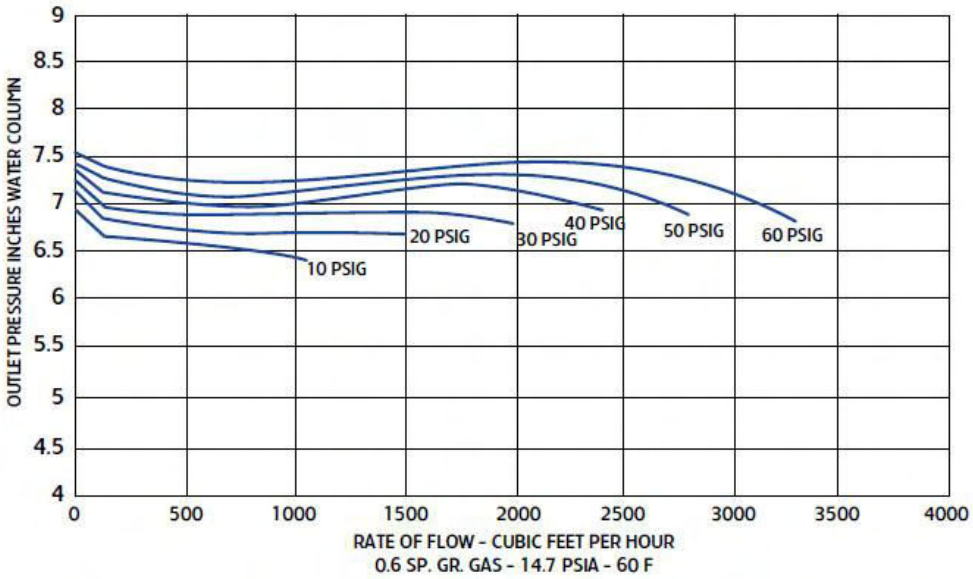

B34 RELIEF CURVES

7" w.c. Set Point

Inlet size:	2" NPT
Outlet size:	2" NPT
Vent size:	1/4" x 3/8"

All test results are reported at a base of 14.7 PSIG at 60º F and with 0.6 S.G. gas.

Regulator set at 7.0" w.c. with 40 PSIG inlet pressure at 200 SCFH.

B34R Relief Curves, Blocked Open, 7" w.c. Set Point

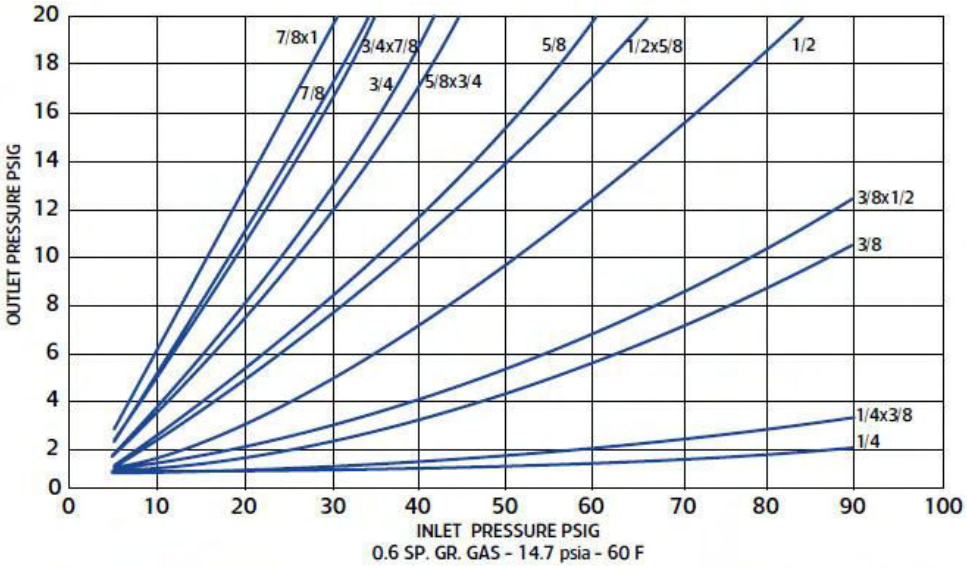

B34 SERIES COMMERCIAL REGULATOR, MODELS N, R, M, AND D

14" w.c. (35 mbar) Capacity Table (2" w.c. Droop*) 2" Outlet

Capacities in SCFH of 0.6 S.G. gas; base conditions of 14.7 PSIA and 60° F.

Typical Capacity Info.	
Manufacturer	ROOTS Regulators
Type and model	B34R
Regulator	
Inlet size:	2″ NPT
Outlet size:	2″ NPT
Position	11
Spring	Purple

Inlet Pressure		**Orifice Size**							
PSIG Bar		**1/4″**		**1/4″ x 3/8″**		**3/8″**		**3/8″ x 1/2″**	
16″ w.c.	0.040					350	(9.9)	400	(11.3)
18″ w.c.	0.045			250	(7.1)	400	(11.3)	520	(14.7)
21″ w.c.	0.052	220	(6.2)	300	(8.5)	500	(14.2)	600	(17.0)
24″ w.c.	0.060	260	(7.4)	370	(10.5)	550	(15.6)	750	(21.2)
1	0.069	300	(8.5)	430	(12.2)	700	(19.8)	800	(22.7)
2	0.138	550	(15.6)	600	(17.0)	1200	(34.0)	1400	(39.6)
3	0.207	700	(19.8)	750	(21.2)	1600	(44.4)	2200	(62.3)
5	0.345	900	(25.5)	1000	(28.3)	2000	(56.6)	2300	(65.1)
10	0.69	1300	(36.8)	1500	(42.5)	3000	(85.0)	3200	(90.1)
20	1.38	2100	(59.5)	2300	(65.1)	4800	(135.9)	5000	(141.6)
30	2.07	2700	(76.5)	2800	(79.3)	6700	(189.7)	6900	(195.4)
40	2.76	3400	(96.3)	3600	(101.9)	7600	(215.2)	7800	(220.9)
50	3.45	3900	(110.4)	4200	(118.9)	8700	(246.4)	9000	(254.9)
60	4.14	4500	(127.4)	4700	(133.1)	10000	(283.2)	10000	(283.2)
70	4.83	4900	(138.8)	5100	(144.4)	10000	(283.2)	10000	(283.2)
80	5.52	5400	(152.9)	5600	(158.6)	10000	(283.2)	10000	(283.2)
90	6.21	6500	(184.1)	6700	(189.7)	10000	(283.2)	10000	(283.2)v
100	6.90	7000	(198.2)	7500	(212.4)	10000	(283.2)		
125	8.63	8500	(240.7)	9000	(254.9)	10000	(283.2)		

Inlet Effect [A] in. w.c. (mbar)	0.4 (0.8)	0.3 (0.8)	0.3 (0.8)	0.4 (0.8)
Lock Up [B] in. w.c. (mbar)	0.3 (0.8)	0.4 (0.8)	0.5 (0.8)	0.5 (1.3)

Notes:

*Individual regulator performance may vary from data shown.

A. Change in outlet pressure for 10 PSIG inlet pressure change.

B. Outlet pressure increase required for lock up.

Do not operate orifice in shaded inlet pressure area.

Inlet pressure is too low to deliver 14" w.c. (35 mbar).

14″ w.c. (35 mbar) Capacity Table (2″ Droop) 2″ Outlet continued

Capacities in SCFH of 0.6 S.G. gas; base conditions of 14.7 PSIA and 60° F.

Inlet Pressure		Orifice size															
PSIG	Bar	1/2″		1/2″ x 5/8″		5/8″		5/8″ x 3/4″		3/4″		3/4″ x 7/8″		7/8″		7/8″ x 1″	
16″ w.c.	0.040	450	(12.7)	500	(14.2)	600	(17.0)	700	(19.8)	750	(21.2)	900	(25.5)	950	(26.9)	1050	(29.7)
18″ w.c.	0.045	600	(17.0)	700	(19.8)	750	(21.2)	850	(24.1)	900	(25.5)	1050	(29.7)	1200	(34.0)	1300	(36.8)
21″ w.c.	0.052	750	(21.2)	850	(24.1)	900	(25.5)	1100	(31.1)	1250	(35.4)	1400	(39.6)	1450	(41.1)	1500	(42.5)
24″ w.c.	0.060	800	(22.7)	1100	(31.1)	1150	(32.6)	1350	(38.2)	1400	(39.6)	1500	(42.5)	1550	(43.9)	1700	(48.1)
1	0.069	900	(25.5)	1200	(34.0)	1350	(38.2)	1450	(41.1)	1550	(43.9)	1650	(46.7)	1800	(51.0)	2150	(60.9)
2	0.138	1700	(48.1)	1900	(53.8)	2550	(72.2)	2800	(79.3)	3100	(87.8)	3200	(90.6)	4200	(118.9)	4400	(124.6)
3	0.207	2400	(68.0)	3000	(85.0)	3400	(96.3)	3600	(101.9)	3800	(107.6)	3900	(110.4)	4500	(127.4)	5200	(147.2)
5	0.345	2500	(70.8)	4000	(113.3)	4200	(118.9)	5000	(141.6)	5500	(155.7)	6000	(169.9)	6300	(178.4)	6500	(184.1)
10	0.69	4700	(133.1)	6000	(169.9)	7000	(198.2)	7600	(215.2)	8800	(249.2)	9000	(254.9)	9100	(257.7)	10000	(283.2)
20	1.38	8300	(235.0)	8500	(240.7)	10000	(283.2)	10000	(283.2)	10000	(283.2)	10000	(283.2)	10000	(283.2)	10000	(283.2)
30	2.07	10000	(283.2)	10000	(283.2)	10000	(283.2)	10000	(283.2)	10000	(283.2)	10000	(283.2)	10000	(283.2)		
40	2.76	10000	(283.2)	10000	(283.2)	10000	(283.2)	10000	(283.2)	10000	(283.2)	10000	(283.2)	10000	(283.2)		
50	3.45	10000	(283.2)	10000	(283.2)	10000	(283.2)	10000	(283.2)	10000	(283.2)	10000	(283.2)	10000	(283.2)		
60	4.14	10000	(283.2)	10000	(283.2)	10000	(283.2)	10000	(283.2)	10000	(283.2)	10000	(283.2)	10000	(283.2)		
70	4.83	10000	(283.2)	10000	(283.2)												
80	5.52																
90	6.21																
100	6.90																
125	8.63																

Inlet Effect[A] in. w.c. (mbar)	0.4 (0.8)	0.4 (0.8)	0.5 (1.0)	0.5 (1.3)	0.5 (1.3)	0.5 (1.3)	0.6 (1.5)	0.6 (1.5)
Lock Up[B] in. w.c. (mbar)	0.5 (1.3)	0.6 (1.5)	1.1 (2.5)	1.1 (2.5)	1.2 (2.8)	1.2 (2.8)	1.2 (2.8)	1.2 (2.8)

Notes:

*Individual regulator performance may vary from data shown.

A. Change in outlet pressure for 10 PSIG inlet pressure change.

B. Outlet pressure increase required for lock up.

Do not operate orifice in shaded inlet pressure area.

B34 PERFORMANCE CURVES

14" w.c. Set Point

Type and model	B34R
Inlet size:	2" NPT
Outlet size:	2" NPT
Orifice size:	1/4" x 3/8"
Spring	Purple

All test results are reported at a base of 14.7 PSIA at 60º F and with 0.6 S.G. gas.

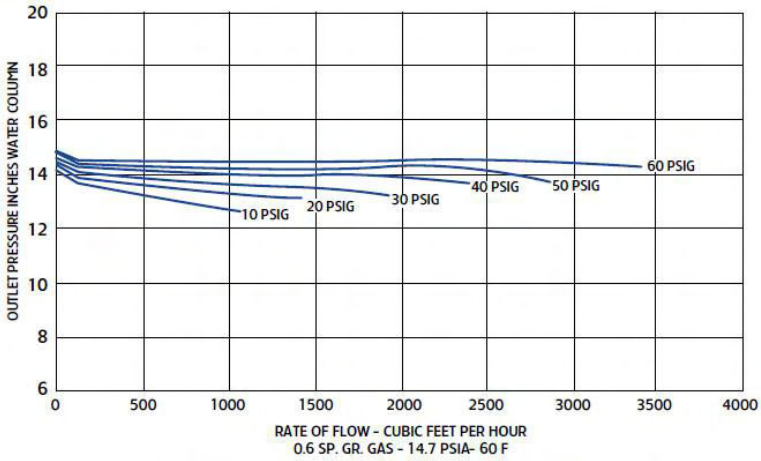

B34 RELIEF CURVES

14" w.c. Set Point

Inlet size:	2" NPT
Outlet size:	2" NPT
Vent size:	1" NPT

All test results are reported at a base of 14.7 PSIA at 60º F and with 0.6 S.G. gas.

Regulator set at 14.0" w.c. with 40 PSIG inlet pressure at 200 SCFH.

B34R Relief Curves, Blocked Open, 14" Set Point

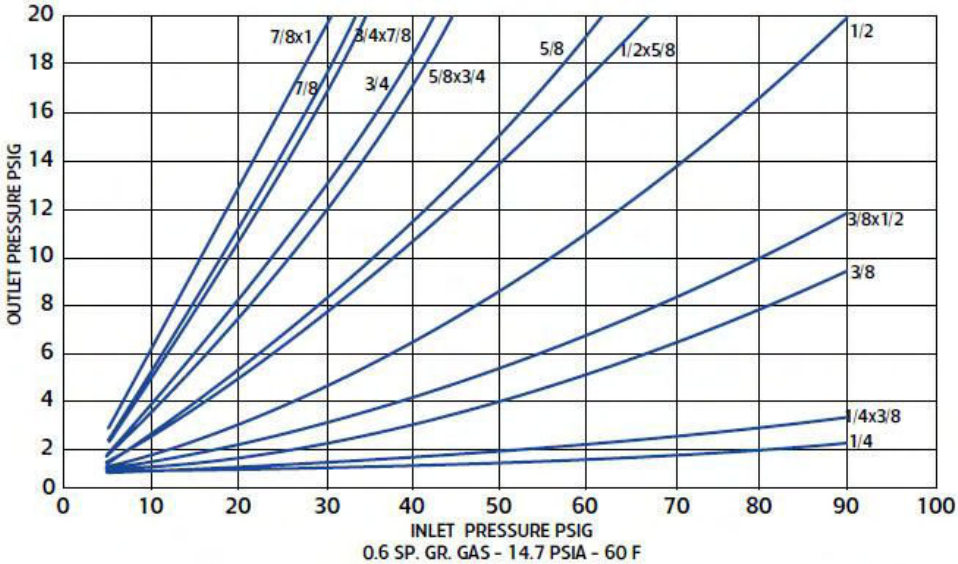

B34R SERIES COMMERCIAL REGULATOR

1 PSIG (69 mbar) Capacity Table (1% Absolute Droop*) 2" Outlet

Typical Capacity Info.	
Manufacturer	ROOTS Regulators
Type and model	B34R
Regulator	
Inlet size:	2" NPT
Outlet size:	2" NPT
Position	11
Spring	Silver

Capacities in SCFH of 0.6 S.G. gas; base conditions of 14.7 PSIA and 60° F.

Inlet Pressure		**Orifice Size**											
PSIG	**Bar**	**1/4"**		**1/4" x 3/8"**		**3/8"**		**3/8" x 1/2"**		**1/2"**		**1/2" x 5/8"**	
2	(0.138)												
3	(0.207)	550	(15.6)	575	(16.3)	1250	(35.8)	1300	(36.8)	1400	(39.6)	1500	(42.5)
5	(0.345)	600	(17.0)	1000	(28.3)	1500	(42.5)	1500	(42.5)	1800	(51.0)	2000	(56.6)
10	(0.69)	1000	(28.3)	1500	(42.5)	2000	(56.6)	2800	(79.3)	3000	(85.0)	4300	(121.8)
20	(1.38)	1700	(47.6)	2200	(62.3)	4000	(113.3)	4700	(133.1)	6300	(178.4)	8000	(226.5)
30	(2.07)	2400	(68.0)	2800	(79.3)	5600	(158.6)	6400	(181.2)	10000	(283.2)	11000	(311.5)
40	(2.76)	2800	(79.3)	3600	(101.9)	7000	(198.2)	7800	(220.9)	12500	(354.0)	13000	(368.1)
50	(3.45)	3700	(104.8)	4200	(118.9)	9000	(254.9)	9000	(254.9)	14000	(396.4)	15500	(438.9)
60	(4.14)	4000	(113.3)	4700	(133.1)	10000	(283.2)	10000	(283.2)	16000	(453.1)	17000	(481.4)
70	(4.83)	4800	(135.9)	5200	(147.2)	10800	(305.8)	11800	(334.1)	16500	(467.2)	18000	(509.7)
80	(5.52)	5150	(145.8)	5500	(155.7)	11400	(322.8)	13000	(368.1)	17000	(481.4)	19000	(538.0)
90	(6.21)	5300	(150.1)	5600	(158.6)	12300	(348.3)	14000	(396.4)	17500	(495.5)	20000	(566.3)
100	(6.90)	7000	(198.2)	7300	(206.7)	13500	(382.3)	15000	(424.8)	18000	(509.7)	20000	(566.3)
125	(8.63)	8400	(237.9)	8700	(246.4)	14200	(402.1)	15800	(447.4)	18900	(535.2)	20000	(566.3)

Inlet Effect [A] PSIG (mbar)	0.02 (1.38)	0.02 (1.38)	0.02 (1.38)	0.02 (1.38)	0.02 (1.38)	0.02 (1.38)
Lock Up [B] (mbar)	0.02 (1.38)	0.02 (1.38)	0.02 (1.38)	0.02 (1.38)	0.02 (1.38)	0.02 (1.38)

Notes:

*Individual regulator performance may vary from data shown.

Inlet pressure is too low to deliver 1 PSIG (69 mbar).

1 PSIG (69 mbar) Capacity Table (1% Absolute Droop*) 2" Outlet (continued)

Capacities in SCFH of 0.6 S.G. gas; base conditions of 14.7 PSI and 60° F.

Input Pressure		Orifice Size											
PSIG	Bar	5/8"		5/8" x 3/4"		3/4"		3/4" x 7/8"		7/8"		7/8" x 1"	
2	0.138	1300	(36.8)	1350	(38.2)	1400	(39.6)	1425	(40.4)	1500	(42.5)	2000	(56.6)
3	0.207	1800	(51.0)	1900	(53.8)	2000	(56.6)	2050	(58.0)	2100	(59.5)	2200	(62.3)
5	0.345	2100	(59.5)	2700	(76.5)	2700	(76.5)	3200	(90.6)	3500	(99.1)	4000	(113.3)
10	0.69	4600	(130.3)	5800	(164.2)	6000	(169.9)	7500	(212.4)	8000	(226.5)	8500	(240.7)
20	1.38	8500	(240.7)	11000	(308.0)	11300	(320.9)	12000	(339.8)	12500	(354.0)	14000	(396.4)
30	2.07	12500	(354.0)	16200	(458.7)	16500	(467.2)	17500	(495.5)	18000	(509.7)	19000	(538.0)
40	2.76	14500	(410.6)	17200	(487.0)	17600	(498.4)	18500	(523.9)	20000	(566.3)	20000	(566.3)
50	3.45	16300	(461.6)	18000	(509.7)	18400	(521.0)	19300	(546.5)	20000	(566.3)	20000	(566.3)
60	4.14	17300	(489.9)	18200	(515.4)	18700	(529.5)	20000	(566.3)	20000	(566.3)	20000	(566.3)
70	4.83	18200	(515.4)	19100	(540.9)	19600	(555.0)	20000	(566.3)	20000	(566.3)	20000	(566.3)
80	5.52	19100	(540.9)	20000	(566.3)	20000	(566.3)	20000	(566.3)	20000	(566.3)	20000	(566.3)
90	6.21	20000	(566.3)	20000	(566.3)	20000	(566.3)	20000	(566.3)	20000	(566.3)	20000	(566.3)
100	6.90	20000	(566.3)	20000	(566.3)	20000	(566.3)	20000	(566.3)	20000	(566.3)	20000	(566.3)
125	8.63	20000	(566.3)	20000	(566.3)	20000	(566.3)	20000	(566.3)	20000	(566.3)	20000	(566.3)

In Effect[A] PSIG (mbar)	0.03 (2.07)	0.03 (2.07)	0.03 (2.07)	0.04 (2.76)	0.04 (2.76)	0.04 (2.76)
Lock Up[B] PSIG (mbar)	0.03 (2.07)	0.03 (2.07)	0.03 (2.07)	0.04 (2.76)	0.04 (2.76)	0.05 (3.45)

Notes:

*Individual regulator performance may vary from data shown.

B34R SERIES COMMERCIAL REGULATOR

1 PSIG (69 mbar) Capacity Table (2% Absolute Droop*) 2" Outlet

Typical Capacity Info.

Manufacturer	ROOTS Regulators
Type and model	B34R
Regulator	
Inlet size:	2″ NPT
Outlet size:	2″ NPT
Position	11
Spring	Silver

Capacities in SCFH of 0.6 S.G. gas; base conditions of 14.7 PSIA and 60° F.

Inlet Pressure		Orifice Size											
PSIG	**Bar**	**1/4″**		**1/4″ x 3/8″**		**3/8″**		**3/8″ x 1/2″**		**1/2″**		**1/2″ x 5/8″**	
2	(0.138)												
3	(0.207)	700	(19.8)	750	(21.2)	1500	(42.5)	1600	(45.3)	2300	(65.1)	2400	(68.0)
5	(0.345)	800	(22.4)	1000	(28.3)	1900	(53.8)	2000	(56.6)	3400	(96.3)	3700	(104.8)
10	(0.69)	1500	(42.5)	1500	(42.5)	3000	(85.0)	3200	(90.6)	5000	(141.6)	6000	(169.9)
20	(1.38)	1650	(46.7)	2200	(62.3)	4500	(127.4)	4800	(135.9)	8500	(240.7)	9000	(254.9)
30	(2.07)	2700	(76.5)	2900	(82.1)	6300	(178.4)	6500	(184.1)	11000	(311.5)	11500	(325.6)
40	(2.76)	3340	(94.6)	3500	(99.1)	7400	(209.5)	7600	(215.2)	13000	(368.1)	13500	(382.3)
50	(3.45)	3950	(111.9)	4100	(116.1)	8500	(240.7)	9000	(254.9)	15500	(438.9)	16000	(453.1)
60	(4.14)	4700	(133.1)	4700	(133.1)	10500	(297.3)	10800	(305.8)	16500	(467.2)	17000	(481.4)
70	(4.83)	4750	(134.5)	5000	(141.6)	11000	(311.5)	11600	(328.5)	17500	(495.5)	18000	(509.7)
80	(5.52)	4950	(140.2)	5400	(152.9	12000	(339.8)	13000	(368.1)	18000	(509.7)	19000	(5380)
90	(6.21)	5500	(155.7)	6500	(184.1)	12500	(354.0)	13500	(382.3)	19000	(538.0)	20000	(566.3)
100	(6.90)	7000	(198.2)	7250	(205.3)	13250	(375.2)	14000	(396.4)	20000	(566.3)	20000	(566.3)
125	(8.63)	8500	(240.7)	9000	(254.9)	13900	(393.6)	14700	(416.3)	20000	(566.3)	20000	(566.3)

Inlet Effect [A] PSIG (mbar)	0.02 (1.38)	0.02 (1.38)	0.02 (1.38)	0.02 (1.38)	0.02 (1.38)	0.02 (1.38)
Lock Up [B] PSIG (mbar)	0.02 (1.38)	0.02 (1.38)	0.02 (1.38)	0.02 (1.38)	0.02 (1.38)	0.02 (1.38)

Notes:

*Individual regulator performance may vary from data shown.

A. Change in outlet pressure for 10 PSIG inlet pressure change.

B. Outlet pressure increase required for lock up.

Inlet pressure is too low to deliver 1 PSIG (69 mbar).

1 PSIG (69 mbar) Capacity Table (2% Absolute Droop*) 2" Outlet (continued)

Capacities in SCFH of 0.6 S.G. gas; base conditions of 14.7 PSIA and 60° F.

Input Pressure		Orifice Size											
PSIG	Bar	5/8"		5/8" x 3/4"		3/4"		3/4" x 7/8"		7/8"		7/8" x 1"	
2	0.138												
3	0.207	2800	(79.3)	3000	(85.0)	3400	(96.3)	3800	(107.6)	4000	(113.3)	6000	(170.9)
5	0.345	4000	(113.3)	5000	(141.6)	5200	(147.2)	6000	(169.9)	7000	(198.2)	7500	(212.4)
10	0.69	7000	(198.2)	8900	(252.0)	9000	(254.9)	10000	(283.2)	11500	(325.6)	13000	(368.1)
20	1.38	10000	(283.2)	12000	(339.8)	13000	(368.1)	15000	(424.8)	15500	(438.9)	19000	(538.0)
30	2.07	13000	(368.1)	16000	(445.1)	18000	(509.7)	19000	(538.0)	20000	(566.3)	20000	(566.3)
40	2.76	16000	(453.1)	16500	(467.2)	19000	(538.0)	19500	(552.2)	20000	(566.3)	20000	(566.3)
50	3.45	19000	(538.0)	20000	(566.3)	20000	(566.3)	20000	(566.3)	20000	(566.3)	20000	(566.3)
60	4.14	20000	(566.3)	20000	(566.3)	20000	(566.3)	20000	(566.3)	20000	(566.3)	20000	(566.3)
70	4.83	20000	(566.3)	20000	(566.3)	20000	(566.3)	20000	(566.3)	20000	(566.3)	20000	(566.3)
80	5.52	20000	(566.3)	20000	(566.3)	20000	(566.3)	20000	(566.3)	20000	(566.3)	20000	(566.3)
90	6.21	20000	(566.3)	20000	(566.3)	20000	(566.3)	20000	(566.3)	20000	(566.3)	20000	(566.3)
100	6.90	20000	(566.3)	20000	(566.3)	20000	(566.3)	20000	(566.3)	20000	(566.3)	20000	(566.3)
125	8.63	20000	(566.3)	20000	(566.3)	20000	(566.3)	20000	(566.3)	20000	(566.3)	20000	(566.3)

Inlet Effect[A] PSIG (mbar)	0.03 (2.07)	0.03 (2.07)	0.03 (2.07)	0.04 (2.76)	0.04 (2.76)	0.04 (2.76)
Lock Up[B] PSIG (mbar)	0.03 (2.07)	0.03 (2.07)	0.03 (2.07)	0.04 (2.76)	0.04 (2.76)	0.05 (3.45)

Notes:

*Individual regulator performance may vary from data shown.

B34 PERFORMANCE CURVES

1 PSIG Set Point

Type and model	B34R
Inlet size:	2″ NPT
Outlet size:	2″ NPT
Orifice size:	1/4″ x 3/8″
Spring	Silver

All test results are reported at a base of 14.7 PSIA at 60ºF and with 0.6 S.G. gas.

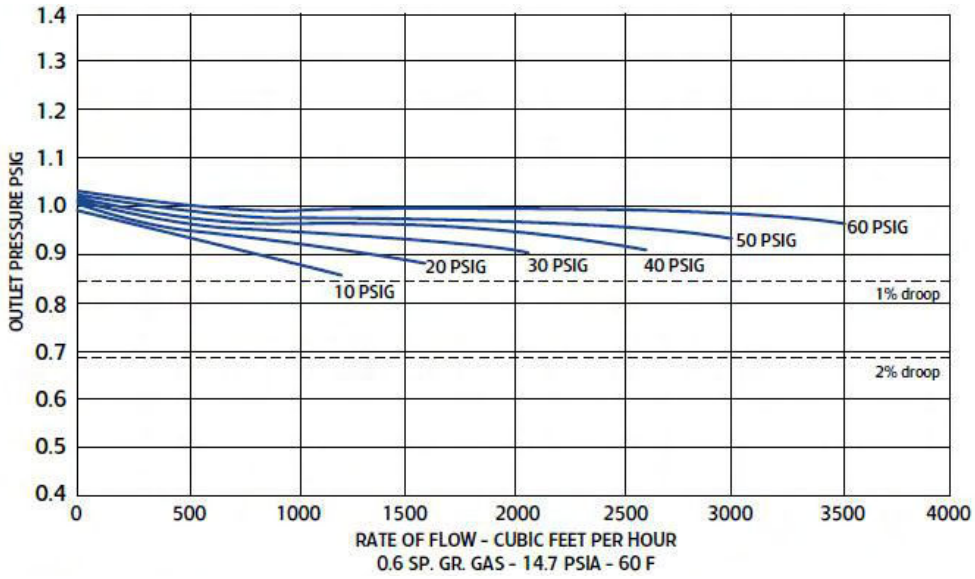

RELIEF CURVES

1 PSIG Set Point

Inlet size:	2″ NPT
Outlet size:	2″ NPT
Vent size:	1″ NPT

All test results are reported at a base of 14.7 PSIA at 60º F and with 0.6 S.G. gas.

Regulator set at 1.0 PSIG with 40 PSIG inlet pressure at 200 SCFH.

B34R Relief Curves, Blocked Open, 1 PSIG Set Point

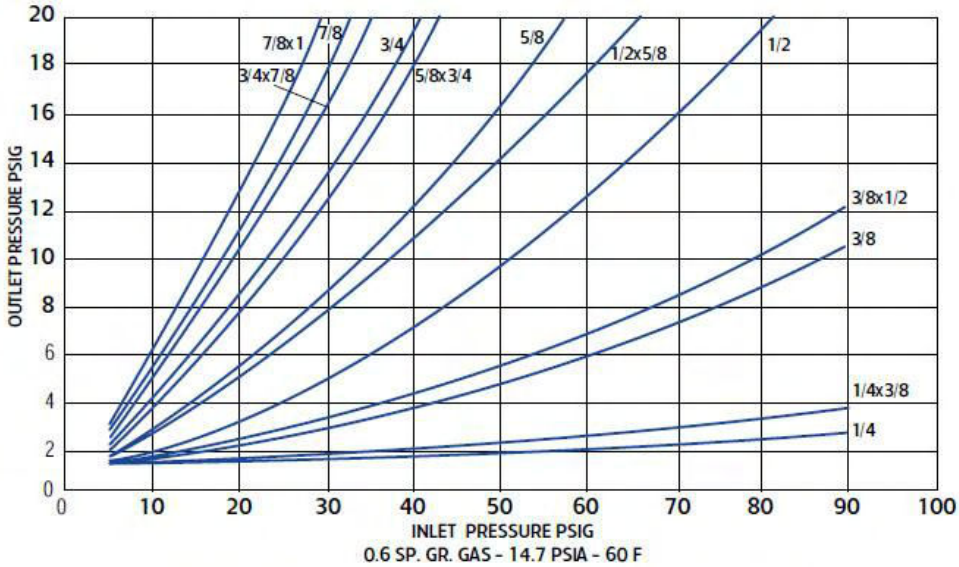

B34R SERIES COMMERCIAL REGULATOR

2 PSIG (69 mbar) Capacity Table (1% Absolute Droop*) 2" Outlet

Capacities in SCFH of 0.6 S.G. gas; base conditions of 14.7 PSIA and 60° F.

Typical Capacity Info.

Manufacturer	ROOTS Regulators
Type and model	B34R
Regulator	
Inlet size:	2″ NPT
Outlet size:	2″ NPT
Position	11
Spring	Silver

Inlet Pressure		**Orifice Size**											
PSIG	**Bar**	**1/4″**		**1/4″ x 3/8″**		**3/8″**		**3/8″ x 1/2″**		**1/2″**		**1/2″ x 5/8″**	
3	0.207												
5	0.345	500	(14.2)	900	(25.5)	1000	(28.3)	1500	(42.5)	1700	(48.1)	1900	(53.8)
10	0.69	1000	(28.3)	1700	(48.1)	1800	(51.0)	2500	(70.8)	2700	(76.5)	3000	(85.0)
20	1.38	1050	(29.7)	2200	(62.3)	2300	(65.1)	4700	(133.1)	5200	(147.2)	5400	(152.9)
30	2.07	2200	(62.3)	2800	(79.3)	3700	(104.8)	6500	(184.1)	7000	(198.2)	9500	(269.0)
40	2.76	2700	(76.5)	3500	(99.1)	6000	(169.9)	7500	(212.4)	10800	(305.8)	12500	(354.0)
50	3.45	3500	(99.1)	4100	(116.1)	7600	(215.2)	8800	(249.2)	13300	(376.6)	14500	(410.6)
60	4.14	4000	(113.3)	4700	(133.1)	9500	(269.0)	10000	(283.2)	14000	(396.4)	16000	(453.1)
70	4.83	4400	(124.6)	5000	(141.6)	10900	(308.7)	11300	(320.0)	16000	(453.1)	16500	(467.2)
80	5.52	4800	(135.9)	5400	(152.9)	12500	(354.0)	13000	(368.1)	20000	(566.3)	20000	(566.3)
90	6.21	5500	(155.7)	5600	(158.6)	12300	(348.3)	13500	(382.3)	20000	(566.3)	20000	(566.3)
100	6.90	6400	(181.2)	7000	(198.2)	12800	(362.5)	14800	(419.1)	20000	(566.3)	20000	(566.3)
125	8.63	7000	(198.2)	7400	(209.5)	13400	(379.4)	15500	(438.9)	20000	(566.3)	20000	(566.3)

Inlet Effect [A] PSIG (mbar)	0.02 (1.38)	0.02 (1.38)	0.02 (1.38)	0.02 (1.38)	0.03 (2.07)	0.03 (2.07)
Lock Up [B] PSIG (mbar)	0.03 (2.07)	0.03 (2.07)	0.03 (2.07)	0.03 (2.07)	0.03 (2.07)	0.03 (2.07)

Notes:

*Individual regulator performance may vary from data shown.

A. Change in outlet pressure for 10 PSIG inlet pressure change.

B. Outlet pressure increase required for lock up.

Inlet pressure is too low to deliver 2 PSIG (138 mbar).

2 PSIG (69 mbar) Capacity Table (1% Absolute Droop*) 2" Outlet continued

Capacities in SCFH of 0.6 S.G. gas; base conditions of 14.7 PSIA and 60Â° F.

Inlet Pressure		Orifice Size											
PSIG	Bar	5/8"		5/8" x 3/4"		3/4"		3/4" x 7/8"		7/8"		7/8" x 1"	
3	0.207			1300	(36.8)	1500	(42.5)	1600	(45.3)	1700	(48.1)	2000	(56.6)
5	0.345	2000	(56.6)	2250	(63.7)	2500	(70.8)	3000	(85.0)	3000	(85.0)	3200	(90.6)
10	0.69	3200	(90.6)	4800	(135.9)	5000	(141.6)	6500	(184.1)	6800	(192.6)	7500	(212.4)
20	1.38	5500	(155.7)	8500	(240.7)	9000	(254.9)	9000	(254.9)	10600	(300.2)	11200	(317.1)
30	2.07	10000	(283.2)	13000	(368.1)	14500	(410.6)	16000	(453.1)	17000	(481.4)	17400	(492.7)
40	2.76	13000	(368.1)	16500	(467.2)	17900	(506.9)	18300	(518.2)	18900	(535.2)	20600	(566.3)
50	3.45	15000	(424.8)	19000	(538.0)	20000	(566.3)	20000	(566.3)	20000	(566.3)	20000	(566.3)
60	4.14	17000	(481.4)	19500	(552.2)	20000	(566.3)	20000	(566.3)	20000	(566.3)	20000	(566.3)
70	4.83	17900	(506.9)	20000	(566.3)	20000	(566.3)	20000	(566.3)	20000	(566.3)	20000	(566.3)
80	5.52	18800	(532.4)	20000	(566.3)	20000	(566.3)	20000	(566.3)	20000	(566.3)	20000	(566.3)
90	6.21	19700	(557.8)	20000	(566.3)	20000	(566.3)	20000	(566.3)	20000	(566.3)	20000	(566.3)
100	6.90	20000	(566.3)	20000	(566.3)	20000	(566.3)	20000	(566.3)	20000	(566.3)	20000	(566.3)
125	8.63	20000	(566.3)	20000	(566.3)	20000	(566.3)	20000	(566.3)	20000	(566.3)	20000	(566.3)

Inlet Effect[A] PSIG (mbar)	0.03 (2.07)	0.03 (2.07)	0.03 (2.07)	0.03 (2.07)	0.03 (2.07)	0.03 (2.07)
Lock Up[B] PSIG (mbar)	0.04 (2.76)	0.04 (2.76)	0.04 (2.76)	0.06 (4.14)	0.07 (4.83)	0.07 (4.83)

Notes:

*Individual regulator performance may vary from data shown.

A. Change in outlet pressure for 10 PSIG inlet pressure change.

B. Outlet pressure increase required for lock up.

Inlet pressure is too low to deliver 2 PSIG (138 mbar).

B34R SERIES COMMERCIAL REGULATOR

2 PSIG (69 mbar) Capacity Table (2% Absolute Droop*) 2" Outlet

Capacities in SCFH of 0.6 S.G. gas; base conditions of 14.7 PSIA and 60° F.

Typical Capacity Info.

Manufacturer	ROOTS Regulators
Type and model	B34R
Regulator	
Inlet size:	2″ NPT
Outlet size:	2″ NPT
Position	11
Spring	Silver

Inlet Pressure		**Orifice Size**											
PSIG	**Bar**	**1/4″**		**1/4″ x 3/8″**		**3/8″**		**3/8″ x 1/2″**		**1/2″**		**1/2″ x 5/8″**	
3	(0.207)												
5	(0.345)	700	(19.8)	900	(25.5)	1800	(51.0)	2000	(56.6)	2800	(79.3)	3100	(87.8)
10	(0.69)	1300	(36.8)	1500	(42.5)	2800	(79.3)	3000	(85.0)	4500	(127.0)	5800	(164.2)
20	(1.38)	1650	(46.7)	2200	(62.3)	4500	(127.4)	4800	(135.9)	8500	(240.7)	9000	(254.9)
30	(2.07)	2700	(76.5)	2900	(82.1)	6300	(178.4)	6500	(184.1)	11000	(311.5)	11500	(325.6)
40	(2.76)	3340	(94.6)	3500	(99.1)	7450	(211.0)	7600	(215.2)	13200	(373.8)	13500	(382.3)
50	(3.45)	3950	(111.9)	4100	(116.1)	8700	(246.4)	9000	(254.9)	15500	(438.9)	16000	(453.1)
60	(4.14)	4500	(127.4)	4700	(133.1)	10200	(288.8)	10500	(297.3)	17000	(481.4)	17000	(481.4)
70	(4.83)	4740	(134.2)	5000	(141.6)	10900	(308.7)	11600	(328.5)	19000	(532.0)	20000	(566.3)
80	(5.52)	4950	(140.2)	5400	(152.9)	12500	(354.0)	13000	(368.1)	20000	(566.3)	20000	(566.3)
90	(6.21)	5800	(164.2)	6000	(170.0)	13000	(368.1)	14000	(396.4)	20000	(566.3)	20000	(566.3)
100	(6.90)	6900	(195.4)	7500	(212.4)	13500	(382.3)	15500	(438.9)	20000	(566.3)	20000	(566.3)
125	(8.63)	8300	(235.0)	8800	(249.2)	14200	(402.1)	16300	(461.6)	20000	(566.3)	20000	(566.3)

Inlet Effect[A] PSIG (mbar)	0.02 (1.38)	0.02 (1.38)	0.02 (1.38)	0.02 (1.38)	0.03 (2.07)	0.03 (2.07)
Lock Up[B] PSIG (mbar)	0.03 (2.07)	0.03 (2.07)	0.03 (2.07)	0.03 (2.07)	0.03 (2.07)	0.03 (2.07)

Notes:

*Individual regulator performance may vary from data shown.

A. Change in outlet pressure for 10 PSIG inlet pressure change.

B. Outlet pressure increase required for lock up.

Inlet pressure is too low to deliver 2 PSIG (138 mbar).

2 PSIG (69 mbar) Capacity Table (2% Absolute Droop*) 2" Outlet (continued)

Capacities in SCFH of 0.6 S.G. gas; base conditions of 14.7 PSIA and 60Â° F.

Input Pressure		Orifice Size											
PSIG	Bar	5/8″		5/8″ x 3/4″		3/4″		3/4″ x 7/8″		7/8″		7/8″ x 1″	
3	0.207			2500	(70.8)	2800	(79.3)	3500	(99.1)	3700	(104.8)	4000	(113.3)
5	0.345	3200	(90.6)	3600	(101.9)	4100	(116.1)	5000	(141.6)	5000	(141.6)	6000	(169.9)
10	0.69	6000	(169.9)	7000	(198.2)	7500	(212.4)	9500	(269.0)	9800	(277.5)	12000	(339.8)
20	1.38	10000	(283.2)	12000	(339.8)	13000	(368.1)	14000	(396.4)	15500	(438.9)	19000	(538.0)
30	2.07	13000	(368.1)	16000	(453.1)	18500	(523.9)	19500	(552.2)	20000	(566.3)	20000	(566.3)
40	2.76	16000	(448.0)	19000	(538.0)	20000	(566.3)	20000	(588.0)	20000	(566.3)	20000	(566.3)
50	3.45	20000	(566.3)	20000	(566.3)	20000	(566.3)	20000	(566.3)	20000	(566.3)	20000	(566.3)
60	4.14	20000	(566.3)	20000	(566.3)	20000	(566.3)	20000	(566.3)	20000	(566.3)	20000	(566.3)
70	4.83	20000	(566.3)	20000	(566.3)	20000	(566.3)	20000	(566.3)	20000	(566.3)	20000	(566.3)
80	5.52	20000	(566.3)	20000	(566.3)	20000	(566.3)	20000	(566.3)	20000	(566.3)	20000	(566.3)
90	6.21	20000	(566.3)	20000	(566.3)	20000	(566.3)	20000	(566.3)	20000	(566.3)	20000	(566.3)
100	6.90	20000	(566.3)	20000	(566.3)	20000	(566.3)	20000	(566.3)	20000	(566.3)	20000	(566.3)
125	8.63	20000	(566.3)	20000	(566.3)	20000	(566.3)	20000	(566.3)	20000	(566.3)	20000	(566.3)

Inlet Effect[A] PSIG (mbar)	0.03 (2.07)	0.03 (2.07)	0.03 (2.07)	0.03 (2.07)	0.03 (2.07)	0.03 (2.07)

Notes:

*Individual regulator performance may vary from data shown.

A. Change in outlet pressure for 10 PSIG inlet pressure change.

B. Outlet pressure increase required for lock up.

Inlet pressure is too low to deliver 2 PSIG (138 mbar).

B34 PERFORMANCE CURVES

2 PSIG Set Point

Type and model	B34R
Inlet size:	2″ NPT
Outlet size:	2″ NPT
Orifice size:	1/4″ x 3/8″
Spring	Silver

All test results are reported at a base of 14.7 PSIA at 60ºF and with 0.6 S.G. gas.

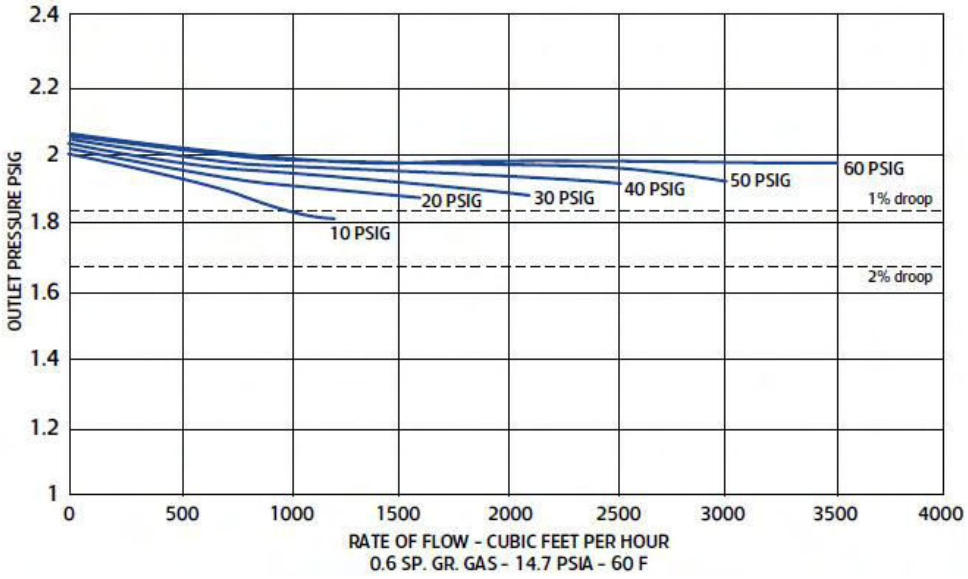

B34 RELIEF CURVES

2 PSIG Set Point

Inlet size:	2″ NPT
Outlet size:	2″ NPT
Vent size:	1″ NPT

All test results are reported at a base of 14.7 PSIA at 60º F and with 0.6 S.G. gas.

Regulator set at 1.0 PSIG with 40 PSIG inlet pressure at 200 SCFH.

B34R Relief Curves, Blocked Open, 2 PSIG Set Point

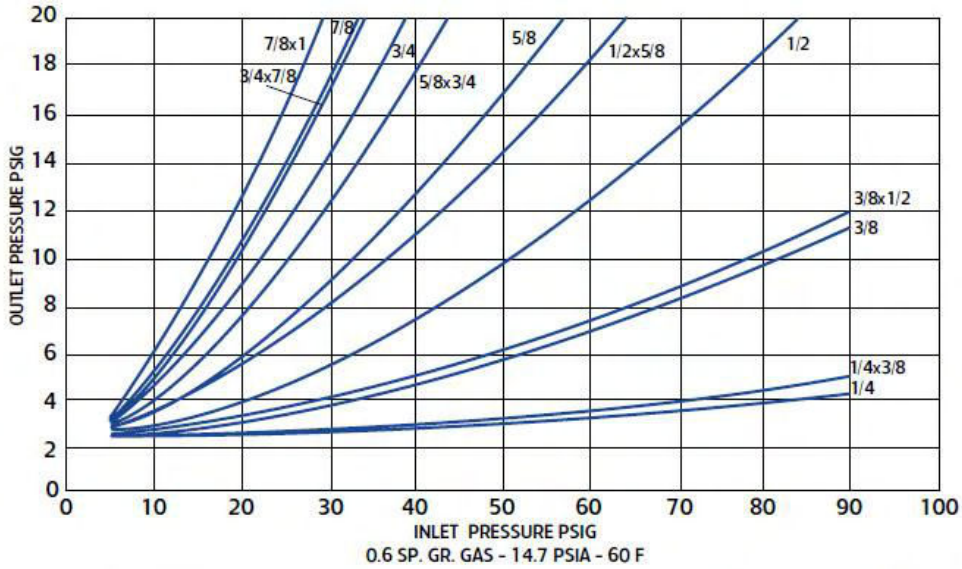

B34R SERIES COMMERCIAL REGULATOR

5 PSIG (345 mbar) Capacity Table (1% Absolute Droop*) 2" Outlet

Typical Capacity Info.	
Manufacturer	ROOTS Regulators
Type and model	B34R
Regulator	
Inlet size:	2″ NPT
Outlet size:	2″ NPT
Position	11
Spring	Red Nested Spring

Capacities in SCFH of 0.6 S.G. gas; base conditions of 14.7 PSIA and 60° F.

Inlet Pressure		**Orifice Size**											
PSIG	**Bar**	**1/4″**		**1/4″ x 3/8″**		**3/8″**		**3/8″ x 1/2″**		**1/2″**		**1/2″ x 5/8″**	
10	(0.69)	500	(14.2)	700	(19.8)	800	(22.7)	900	(25.5)	900	(25.5)	1000	(28.3)
20	(1.38)	800	(22.7)	1100	(31.1)	1100	(31.1)	1300	(36.8)	1500	(42.5)	1900	(53.8)
30	(2.07)	1100	(31.1)	1300	(36.8)	1400	(39.6)	1500	(42.5)	1700	(48.1)	2000	(56.6)
40	(2.76)	1200	(34.0)	1400	(39.6)	1500	(42.5)	1700	(48.1)	2000	(56.6)	2700	(76.5)
50	(3.45)	1300	(36.8)	1500	(42.5)	1700	(48.1)	2000	(56.6)	2500	(70.8)	3500	(99.1)
60	(4.14)	1400	(39.6)	1700	(48.1)	1800	(51.0)	3200	(90.6)	3500	(99.1)	4400	(124.6)
70	(4.83)	1500	(42.5)	1800	(51.0)	1900	(53.8)	3350	(94.9)	3600	(101.9)	4800	(135.9)
80	(5.52)	1600	(45.3)	1900	(53.8)	2000	(56.6)	4200	(118.9)	4500	(127.4)	5100	(152.9)
90	(6.21)	2000	(56.6)	2800	(79.3)	3000	(85.0)	4400	(124.6)	4800	(135.9)	6500	(184.1)
100	(6.90)	2600	(73.6)	3200	(90.6)	3700	(104.8)	4550	(128.8)	5100	(144.4)	7300	(206.7)
125	(8.63)	3200	(90.6)	3400	(96.3)	3900	(110.4)	4800	(135.9)	5400	(152.9)	7700	(218.0)

Inlet Effect[A] PSIG (mbar)	0.02 (1.38)	0.02 (1.38)	0.02 (1.38)	0.02 (1.38)	0.03 (2.07)	0.03 (2.07)
Lock Up[B] PSIG (mbar)	0.05 (0.8)	0.05 (0.8)	0.07 (4.83)	0.07 (4.83)	0.07 (4.83)	0.07 (4.83)

Notes:

*Individual regulator performance may vary from data shown.

A. Change in outlet pressure for 10 PSIG inlet pressure change.

B. Outlet pressure increase required for lock up.

5 PSIG (345 mbar) Capacity Table (1% Absolute Droop*) 2" Outlet (continued)

Capacities in SCFH of 0.6 S.G. gas; base conditions of 14.7 PSIA and 60° F.

Inlet Pressure		Orifice Size											
PSIG	Bar	5/8"		5/8" x 3/4"		3/4"		3/4" x 7/8"		7/8"		7/8" x 1"	
10	0.69	1100	(31.1)	1200	(34.0)	1300	(36.8)	1350	(38.2)	1400	(39.6)	1500	(42.5)
20	1.38	1950	(55.2)	2000	(56.6)	2200	(62.3)	2300	(65.1)	2500	(70.8)	2700	(76.5)
30	2.07	2300	(65.1)	2600	(73.6)	2700	(76.5)	3000	(85.0)	3500	(99.0)	3800	(107.6)
40	2.76	2800	(79.3)	3200	(90.6)	3300	(93.4)	3700	(104.8)	4500	(127.4)	4750	(134.5)
50	3.45	3600	(101.9)	3800	(107.6)	4200	(118.9)	4300	(121.8)	5500	(155.8)	6250	(177.0)
60	4.14	4700	(133.1)	6000	(169.0)	8000	(226.5)	8500	(240.7)	10000	(283.2)	11500	(325.6)
70	4.83	4900	(138.8)	6300	(178.4)	8400	(237.9)	8900	(252.0)	10500	(297.3)	12100	(342.6)
80	5.52	5100	(144.4)	6600	(186.9)	8800	(249.2)	9300	(263.3)	11000	(311.5)	12700	(259.6)
90	6.21	5400	(152.9)	6900	(195.4)	9300	(263.3)	9800	(277.5)	11600	(328.5)	13300	(376.6)
100	6.90	5700	(161.4)	7200	(203.9)	9800	(277.5)	10300	(291.7)	12200	(345.5)	14400	(407.8)
125	8.63	6100	(172.7)	7600	(215.2)	10300	(291.7)	10800	(305.8)	12800	(362.5)	15100	(427.6)

Inlet Effect[A] PSIG (mbar)	0.03 (2.07)	0.03 (2.07)	0.03 (2.07)	0.03 (2.07)	0.03 (2.07)	0.03 (2.07)
Lock Up[B] PSIG (mbar)	0.07 (4.83)	0.07 (4.83)	0.07 (4.83)	0.07 (4.83)	0.08 (5.52)	0.09 (6.21)

Notes:

*Individual regulator performance may vary from data shown.

A. Change in outlet pressure for 10 PSIG inlet pressure change.

B. Outlet pressure increase required for lock up.

B34R SERIES COMMERCIAL REGULATOR

5 PSIG (345 mbar) Capacity Table (2% Absolute Droop*) 2" Outlet

Typical Capacity Info.	
Manufacturer	ROOTS Regulators
Type and model	B34R
Regulator	
Inlet size:	2″ NPT
Outlet size:	2″ NPT
Position	11
Spring	Red Nested

Capacities in SCFH of 0.6 S.G. gas; base conditions of 14.7 PSIA and 60Â° F.

Inlet Pressure		**Orifice Size**											
PSIG	**Bar**	**1/4″**		**1/4″ x 3/8″**		**3/8″**		**3/8″ x 1/2″**		**1/2″**		**1/2″ x 5/8″**	
10	0.69	800	(22.7)	950	(26.9)	1000	(28.3)	1200	(34.0)	1300	(36.8)	1550	(43.9)
20	1.38	1100	(31.1)	1600	(45.3)	1700	(48.1)	2300	(65.1)	2750	(77.9)	2850	(80.7)
30	2.07	1500	(42.5)	2100	(59.5)	2200	(62.3)	2800	(79.3)	3300	(93.4)	3500	(99.1)
40	2.76	2000	(56.6)	2400	(68.0)	2700	(76.5)	3900	(110.4)	4300	(121.8)	5000	(141.6)
50	3.45	2500	(70.8)	3250	(92.0)	3400	(96.3)	4800	(135.9)	5700	(161.4)	7000	(198.2)
60	4.14	2800	(79.3)	4000	(113.3)	4500	(127.4)	5500	(155.7)	6500	(184.1)	7500	(212.4)
70	4.83	2900	(82.1)	4200	(118.9)	4600	(130.3)	5700	(161.4)	7300	(206.7)	8600	(243.5)
80	5.52	3100	(87.8)	4500	(127.4)	4800	(135.9)	8200	(232.2)	8600	(243.5)	9500	(269.0)
90	6.21	3600	(101.9)	5300	(150.1)	5700	(161.4)	9000	(254.9)	10000	(283.2)	15000	(424.8)
100	6.90	4100	(116.1)	6000	(169.9)	6500	(184.1)	10200	(288.8)	11000	(311.5)	15900	(450.2)
125	8.63	4900	(138.8)	6800	(192.6)	6800	(192.6)	10700	(303.0)	11600	(328.5)	16700	(472.9)

Inlet Effect[A] PSIG (mbar)	0.02 (1.38)	0.02 (1.38)	0.02 (1.38)	0.02 (1.38)	0.03 (2.07)	0.03 (2.07)
Lock Up[B] PSIG (mbar)	0.05 (0.8)	0.05 (0.8)	0.07 (4.83)	0.07 (4.83)	0.07 (4.83)	0.07 (4.83)

Notes:

*Individual regulator performance may vary from data shown.

A. Change in outlet pressure for 10 PSIG inlet pressure change.

B. Outlet pressure increase required for lock up.

5 PSIG (345 mbar) Capacity Table (2% Absolute Droop*) 2" Outlet (continued)

Capacities in SCFH of 0.6 S.G. gas; base conditions of 14.7 PSIA and 60Â° F.

Inlet Pressure		Orifice Size											
PSIG	Bar	5/8"		5/8" x 3/4"		3/4"		3/4" x 7/8"		7/8"		7/8" x 1"	
10	0.69	1600	(45.3)	2000	(56.6)	2200	(62.3)	2300	(65.1)	2450	(69.4)	2500	(70.8)
20	1.38	3000	(85.0)	3500	(99.1)	3800	(107.6)	4000	(113.3)	4300	(121.8)	4500	(127.4)
30	2.07	4100	(116.1)	4400	(124.6)	4500	(127.4)	5700	(161.4)	6800	(192.6)	7200	(203.9)
40	2.76	5300	(150.1)	6400	(181.2)	7000	(198.2)	7500	(212.4)	8000	(226.5)	10500	(297.3)
50	3.45	7200	(203.9)	7500	(212.4)	8300	(235.0)	9500	(269.0)	10600	(300.2)	11500	(325.6)
60	4.14	8800	(249.2)	13300	(376.6)	15000	(424.8)	15800	(447.4)	16500	(467.2)	17000	(481.4)
70	4.83	9200	(260.5)	14000	(396.4)	15800	(447.4)	16600	(470.1)	17300	(489.9)	17900	(506.9)
80	5.52	9700	(274.7)	14700	(416.3)	16600	(470.1)	17400	(492.7)	18200	(515.4)	18800	(532.4)
90	6.21	10200	(288.8)	15400	(436.1)	17400	(492.7)	18300	(518.2)	19100	(540.9)	19700	(557.8)
100	6.90	10700	(303.0)	16200	(458.7)	18300	(518.2)	19200	(543.7)	20000	(566.3)	20000	(566.3)
125	8.63	11200	(317.1)	17000	(481.4)	19200	(543.7)	20000	(566.3)	20000	(566.3)	20000	(566.3)

Inlet Effect[A] PSIG (mbar)	0.03 (2.07)	0.03 (2.07)	0.03 (2.07)	0.03 (2.07)	0.03 (2.07)	0.03 (2.07)
Lock Up[B] PSIG (mbar)	0.07 (4.83)	0.07 (4.83)	0.07 (4.83)	0.07 (4.83)	0.08 (5.52)	0.09 (6.21)

Notes:

*Individual regulator performance may vary from data shown.

A. Change in outlet pressure for 10 PSIG inlet pressure change.

B. Outlet pressure increase required for lock up.

B34 PERFORMANCE CURVES

5 PSIG Set Point

Type and model	B34R
Inlet size:	2″ NPT
Outlet size:	2″ NPT
Orifice size:	1/4″ x 3/8″
Spring	Red-Nested

All test results are reported at a base of 14.7 PSIA at 60º F and with 0.6 S.G. gas.

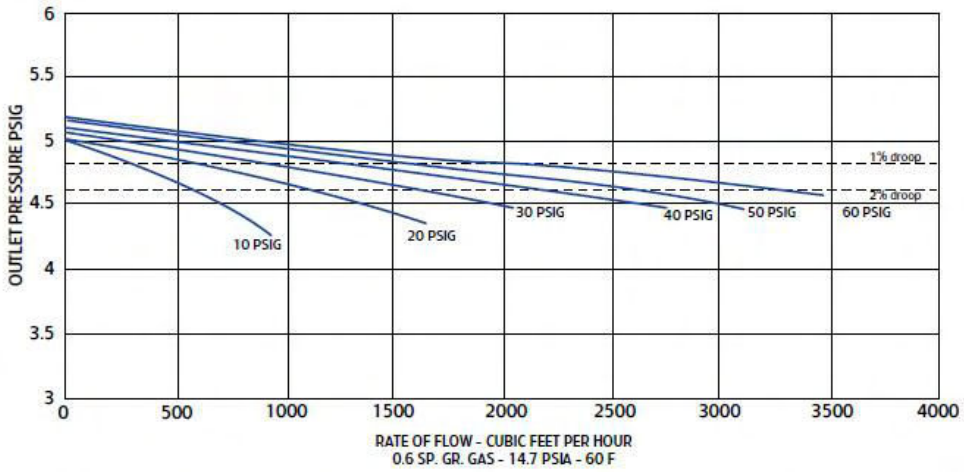

RELIEF CURVES

5 PSIG Set Point

Inlet size:	2″ NPT
Outlet size:	2″ NPT
Orifice size:	1" NPT

All test results are reported at a base of 14.7 PSIA at 60º F and with 0.6 S.G. gas.

B34R Relief Curves, Blocked Open, 5 PSIG Set Point

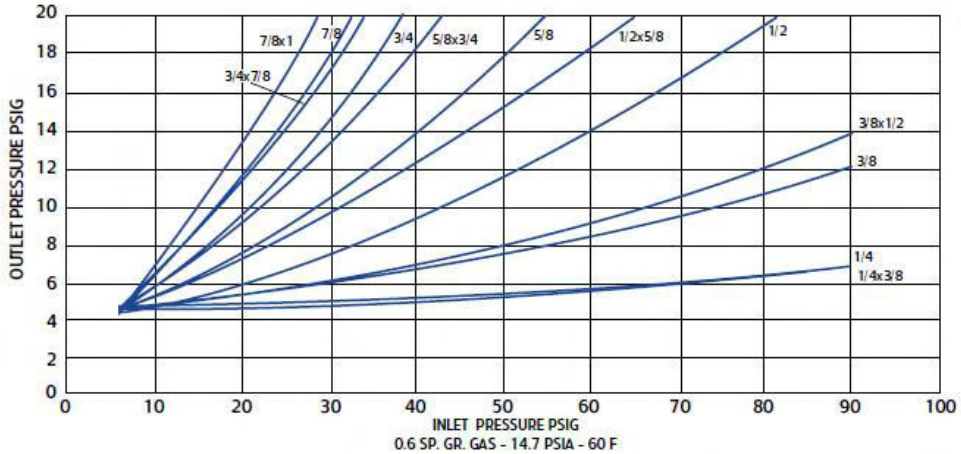

B34 IM INTERNAL MONITOR * SERVICE REGULATOR

General Description

The B-34-IM regulator is designed specifically to comply with BOT OPS 192.197 paragraph B which states, "or if the gas contains materials that seriously interfere with the operation of a service regulator, there must be suitable protective devices to prevent unsafe over-pressuring of the customer's appliance, if the service regulator fails." The code lists the devices; one of the devices is a regulator and monitor. The code further states the monitor may be installed as an internal part of the service regulator or as a separate unit. The IM internal monitor is designed as a single valve body regulator with built-in monitor operation. It features the safety advantage of a second gas tight lock-up seat if the normal orifice face and valve seat fail to produce bubble tight lock up. The monitor also controls gas flow between the failed open flow and no flow, providing complete secondary regulation and monitor regulation function without relieving gas to the atmosphere or shutting off the gas flow to the customer. The monitor overpressure takeover is a 4" w.c. increase on regulators set for 6 to 9" w.c., a 0.5 PSIG increase for regulators set for 2 PSIG, and a 1 PSIG increase for regulators set for 5 PSIG.

*Patent Numbers 3,613,725 and 3,754,570.

PRINCIPLE OF OPERATION

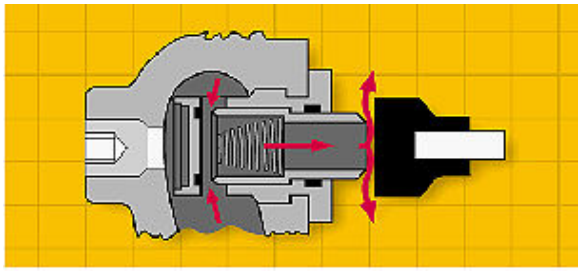

A. Standard regulator and upstream monitor orifice.

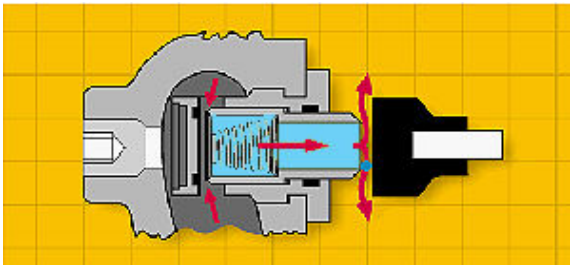

B. Standard regulator orifice failed; upstream monitor orifice control.

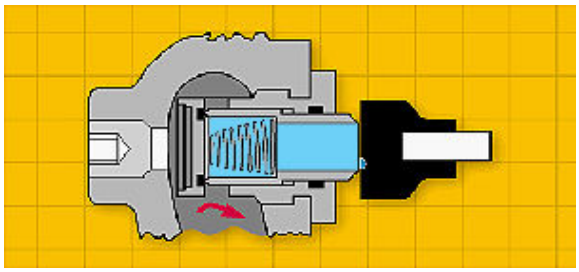

C. Main orifice failed - upstream monitor orifice lock-up.

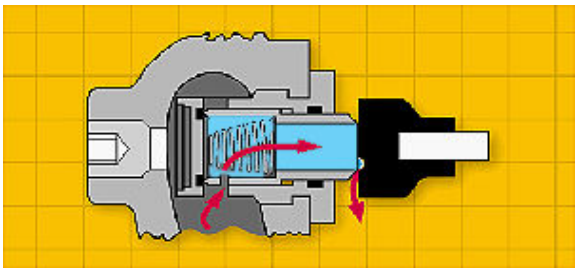

D. V option - vents a small volume of gas to atmosphere through relief valve.

Inlet pressure Outlet pressure

PRINCIPLE OF OPERATION

A. Normal operation. The internal monitor IM orifice performs like a standard regulator and monitor regulator in that main orifice and valve seat actuate to control outlet flow and pressure under normal flow conditions. If there is no demand, the main seat and internal monitor orifice will close.

B. Monitor operation. If the main valve seat fails to control the gas flow and pressure due to foreign matter between the seat and orifice face, or if the seat is eroded, the internal monitor orifice automatically goes into operating position at a slightly at a slightly higher outlet pressure (see Internal Monitor Lock-up Pressure table). Any time the pressure on the main diaphragm exceeds the force of the fixed monitor spring, the increased outlet pressure causes the main valve seat to push against the sliding orifice. The sliding orifice compresses the monitor spring and positions the monitor orifice to control the gas flow. The IM orifice now functions as a monitor regulator and continues to monitor as long as the main seat fails to control at the normal adjusted outlet pressure. If the gas load demand is increased beyond the internal monitor's capacity, the outlet pressure is reduced to normal adjusted pressure and the regulator resumes normal regulation.

C. Monitor lock-up. If the demand for gas is decreased to zero flow during monitor operation, the sliding orifice continues to close until its orifice is in the gas tight position (monitor lock-up) against the BUNA-N monitor valve seat. (See the Internal Monitor Lock-up Pressure table for the outlet pressure required for internal monitor lock-up.)

D. Vent hole V option. On installations where a small volume of over-pressure gas can be safely vented to the atmosphere, the advantages of both the pilot relief valve and monitor safety can be combined. If the flow is decreased to zero or just greater than zero, the vent hole in the internal monitor orifice allows gas to slowly bleed downstream and cause the pressure to rise to the relief point of the pilot's internal relief valve. The gas then bleeds to the atmosphere indicating a problem with the regulator.

RECOMMENDED LOADING RING SETTINGS FOR B34IM & B34IMOPCO

Outlet Pressure	Inlet Pressure	Setting
1 PSIG or less	50 PSIG or less	18° off center line
-	> 50 PSIG	21° off center line
1 PSIG through 2 PSIG	-	12°
> 2 PSIG	-	0°

Exact loading ring settings may vary slightly with individual pressure and load conditions. Optimum setting should be determined by field installations.

B34IM & B34IMOPCO MAXIMUM INLET PRESSURE DATA

Orifice Size (inches)	Max. Inlet Pressure	
	w.c. Outlet	PSIG Outlet
3/4	60	150
5/8	60	150
1/2	75	150
3/8	125	150

OPCO SPRING RANGES

Reg. Set Point	Reg. Internal Monitor OPP #1	Relief Set Point (std relief spring) OPP#2	OPCO Set Point OPP#3	OPCO Spring Range
7"wc	11.5"wc	14.5"	19"-2 psi (55.4" wc)	Red: 0.290-0.870 psi Blue: 0.725-1.740 psi Green: 1.45-5.80psi
1 psi	1.3 psi	1.5 psi	-	Green: 1.45-5.80psi (100-400mbar)
2 psi	2.5 psi	2.6 psi	4 psi	Green: 1.45-5.80psi (100-400mbar)
5 psi	6.1 psi	6.6 psi	7-14 psi	Silver: 5.8-14.5 psi (400-1000mbar)

B34IM & B34IMOPCO SPRING RANGES

Models B34 IM, IMR, IMRV, IMN		
Spring Color	**Part Number**	**Outlet Pressure Range**
Brown	762351	4.5" w.c. - 5.5" w.c.
Green/white	762321	5.5" w.c. - 7.2" w.c.
Black	762355	7.2" w.c. - 13.5" w.c.
Purple	762365	13.0" w.c. - 20.0" w.c.
Blue/white	762358	0.6 PSIG - 1.2 PSIG
Silver/red	762323	0.8 PSIG - 2.2 PSIG
Yellow	762361	0.5 PSIG - 4.4 PSIG
Red-nested	762671	1.8 PSIG - 5.8 PSIG

B34 IMRV & B34IMVOPCO

Main Spring Color	Outlet Pressure Set	Maximum Downstream Pressure Buildup			
		IM Lock Up	Standard Relief Spring B34IMRV, Signal Point	Brown/white Relief Spring B34IMRV, Signal Point	Green Relief Spring B34IMRV, Signal Point
Brown	5.5" w.c.	10.5" w.c.	13.0" w.c.	-	-
Green/White	7.0" w.c.	11.5" w.c.	14.5" w.c.	-	-
Black	11.0" w.c.	16.0" w.c.	20.0" w.c.	-	-
Purple	14.0" w.c.	23.0" w.c.	28.0" w.c.	-	-
Blue	20.0" w.c.	26.0" w.c.	30.0" w.c.	-	-
Blue/white	1 PSIG	1.4 PSIG	1.5 PSIG	2.0 PSIG	-
Silver/red	2 PSIG	2.5 PSIG	2.6 PSIG	3.2 PSIG	-
Yellow	3 PSIG	3.7 PSIG	3.9 PSIG	5.0 PSIG	6.4 PSIG
Red	5 PSIG	6.1 PSIG	6.6 PSIG	8.0 PSIG	8.9 PSIG

V option Flow Chart						
Vented gas flow, regulator seat failed; monitor seat closed						
Inlet Pressure PSIG	20	40	60	75	100	125
Flow SCFH	60	90	120	150	190	230

B34IM SERIES COMMERCIAL REGULATOR, MODELS IMR, IMRV, IMN & OPCO

7" w.c. (17.5 mbar) Capacity Table (1" w.c. Absolute Droop*) 2" Outlet

Capacities in SCFH of 0.6 S.G. gas; base conditions of 14.7 PSIA and 60° F.

Typical Capacity Info.

Manufacturer	ROOTS Regulators
Type and model	B34IMRV
Regulator	
Inlet size:	2" NPT
Outlet size:	2" NPT
Position	11
Spring	Green/white

Inlet Pressure		**Orifice Size**							
PSIG	**Bar**	**3/8"**		**1/2"**		**5/8"**		**3/4"**	
1	0.020	650	(18.4)	950	(26.9)	1100	(31.1)	1400	(39.6)
2	0.025	1000	(28.3)	1350	(38.2)	1900	(53.8)	2200	(62.2)
3	0.030	1200	(33.9)	1750	(19.5)	2400	(67.9)	3000	(84.9)
5	0.035	1800	(50.9)	2500	(70.8)	3200	(90.6)	4500	(127.4)
10	0.040	2800	(79.2)	3650	(103.3)	6500	(184.0)	7500	(212.3)
20	0.045	4500	(127.4)	7800	(220.8)	9200	(260.5)	10000	(283.0)
30	0.052	5800	(164.2)	9500	(269.0)	10000	(283.0)	10000	(283.0)
40	0.60	7000	(198.2)	9850	(278.9)	10000	(283.0)	10000	(283.0)
50	0.069	8650	(244.9)	10000	(283.0)	10000	(283.0)	10000	(283.0)
60	0.138	10000	(283.0)	10000	(283.0)	10000	(283.0)	10000	(283.0)
70	0.207	10000	(283.0)	10000	(283.0)				
80	0.345	10000	(283.0)						
90	0.69	10000	(283.0)						
100	1.38	10000	(283.0)						
125	2.07	10000	(283.0)						

Inlet Effect[A] PSIG (mbar)	0.3 (0.8)	0.4 (1.0)	0.5 (1.3)	0.5 (1.3)
Lock Up[B] PSIG (mbar)	0.3 (0.8)	0.3 (0.8)	0.4 (1.0)	0.4 (1.0)

Notes:

*Individual regulator performance may vary from data shown.

A. Change in outlet pressure for 10 PSIG inlet pressure change.

B. Outlet pressure increase required for lock up.

C. B34IMOPCO capacities are the same as B34IM's.

Do not operate the orifice in the shaded inlet pressure area.

B34 SERIES COMMERCIAL REGULATOR, MODELS IMR, IMRV, IMN & OPCO

14" w.c. (34.4 mbar) Capacity Table (2" w.c. Droop*) 2" Outlet

Typical Capacity Info.	
Manufacturer	ROOTS Regulators
Type and model	B34IMR & OPCO
Regulator	
Inlet size:	2″ NPT
Outlet size:	2″ NPT
Position	11
Spring	Purple

Capacities in SCFH of 0.6 S.G. gas; base conditions of 14.7 PSIA and 60Å°F.

Inlet Pressure		**Orifice Size**							
PSIG	**Bar**	**3/8″**		**1/2″**		**5/8″**		**3/4″**	
1	0.020	500	(14.1)	850	(24.0)	900	(25.4)	1100	(31.1)
2	0.025	900	(25.4)	1350	(38.2)	1500	(42.4)	1850	(52.3)
3	0.030	1200	(33.9)	1750	(19.5)	2000	(56.6)	2450	(69.3)
5	0.035	1800	(50.9)	2500	(70.8)	3000	(84.9)	3500	(99.1)
10	0.040	2600	(73.6)	3500	(99.1)	5000	(141.5)	5300	(150.0)
20	0.045	4300	(121.7)	7500	(212.3)	9000	(254.8)	9500	(269.0)
30	0.052	5600	(158.5)	8200	(232.1)	9700	(274.6)	10000	(283.0)
40	0.60	6700	(189.7)	9500	(269.0)	10000	(283.0)	10000	(283.0)
50	0.069	8250	(233.6)	10000	(283.0)	10000	(283.0)	10000	(283.0)
60	0.138	1000	(283.0)	10000	(283.0)	10000	(283.0)	10000	(283.0)
70	0.207	10000	(283.0)	10000	(283.0)				
80	0.345	10000	(283.0)						
90	0.69	10000	(283.0)						
100	1.38	10000	(283.0)						
125	2.07	10000	(283.0)						

Inlet Effect[A] PSIG (mbar)	0.3 (0.8)	0.4 (1.0)	0.5 (1.3)	0.5 (1.3)
Lock Up[B] PSIG (mbar)	0.3 (0.8)	0.3 (0.8)	0.4 (1.0)	0.4 (1.0)

Notes:

*Individual regulator performance may vary from data shown.

A. Change in outlet pressure for 10 PSIG inlet pressure change.

B. Outlet pressure increase required for lock up.

C. B34IMOPCO capacities are the same as B34IM's.

Do not operate the orifice in the shaded inlet pressure area.

B34 SERIES COMMERCIAL REGULATOR, MODELS IMR, IMRV, IMN & OPCO

1 PSIG (68.9 mbar) Capacity Table (1% Absolute Droop*) 2" Outlet

Capacities in SCFH of 0.6 S.G. gas; base conditions of 14.7 PSIA and 60Å°F.

Typical Capacity Info.	
Manufacturer	ROOTS Regulators
Type and model	B34IMR & OPCO
Regulator	
Inlet size:	2″ NPT
Outlet size:	2″ NPT
Position	11
Spring	Blue/white

Inlet Pressure		**Orifice Size**							
PSIG	**Bar**	**3/8″**		**1/2″**		**5/8″**		**3/4″**	
2	0.025	800	(22.6)	1200	(33.9)	1500	(42.4)	1700	(48.1)
3	0.030	1100	(31.1)	1650	(46.7)	1900	(53.8)	2300	(65.1)
5	0.035	1500	(42.4)	2300	(65.1)	2500	(70.8)	3400	(96.2)
10	0.040	2500	(70.8)	3400	(96.2)	4700	(133.0)	5200	(147.2)
20	0.045	4200	(118.9)	7400	(209.5)	8500	(240.6)	9200	(260.5)
30	0.052	5300	(150.0)	8000	(226.5)	9700	(274.6)	10000	(283.0)
40	0.60	6500	(184.0)	9400	(266.1)	10000	(283.0)	13000	(368.1)
50	0.069	8000	(226.5)	9800	(277.5)	10000	(283.0)	15000	(424.7)
60	0.138	9000	(254.8)	10000	(283.0)	17000	(481.3)	17500	(495.5)
70	0.207	10000	(283.0)	15000	(424.7)	18500	(523.8)	19000	(538.0)
80	0.345	11500	(325.6)	17000	(481.3)	20000	(566.3)	20000	(566.3)
90	0.69	12000	(339.8)	18000	(509.7)	20000	(566.3)	20000	(566.3)
100	1.38	13500	(382.2)	20000	(566.3)	20000	(566.3)	20000	(566.3)
125	2.07	14000	(396.4)	20000	(566.3)	20000	(566.3)	20000	(566.3)

Inlet Effect[A] PSIG (mbar)	0.3 (0.8)	0.4 (1.0)	0.5 (1.3)	0.5 (1.3)
Lock Up[B] PSIG (mbar)	0.3 (0.8)	0.3 (0.8)	0.4 (1.0)	0.4 (1.0)

Notes:

*Individual regulator performance may vary from data shown.

A. Change in outlet pressure for 10 PSIG inlet pressure change.

B. Outlet pressure increase required for lock up.

C. B34IMOPCO capacities are the same as B34IM's.

B34 SERIES COMMERCIAL REGULATOR, MODELS IMR, IMRV, IMN & OPCO

1 PSIG (68.9 mbar) Capacity Table (2% Absolute Droop*) 2" Outlet

Typical Capacity Info.	
Manufacturer	ROOTS Regulators
Type and model	B34IMR & OPCO
Regulator	
Inlet size:	2″ NPT
Outlet size:	2″ NPT
Position	11
Spring	Blue/white

Capacities in SCFH of 0.6 S.G. gas; base conditions of 14.7 PSIA and 60Å°F.

Inlet Pressure		**Orifice Size**							
PSIG	**Bar**	**3/8″**		**1/2″**		**5/8″**		**3/4″**	
2	0.025	900	(26.9)	1350	(38.2)	1900	(53.8)	2000	(56.6)
3	0.030	1300	(36.8)	1800	(50.9)	2200	(62.2)	2600	(73.6)
5	0.035	1800	(50.9)	2700	(76.4)	3300	(93.4)	4200	(118.9)
10	0.040	3000	(84.9)	4700	(133.0)	5800	(164.2)	7300	(206.7)
20	0.045	4500	(127.4)	8000	(226.5)	9200	(260.5)	11000	(311.4)
30	0.052	6000	(169.9)	9000	(254.8)	10500	(297.3)	13000	(368.1)
40	0.60	6800	(192.5)	9500	(269.0)	12000	(339.8)	18000	(509.7)
50	0.069	9000	(254.8)	10000	(283.0)	12000	(339.8)	18000	(509.7)
60	0.138	10500	(297.3)	11000	(311.4)	18000	(509.7)	20000	(566.3)
70	0.207	11500	(325.6)	15500	(438.9)	19200	(543.6)	20000	(566.3)
80	0.345	12000	(339.8)	18000	(509.7)	20000	(566.3)	20000	(566.3)
90	0.69	13000	(368.1)	20000	(566.3)	20000	(566.3)	20000	(566.3)
100	1.38	14500	(410.5)	20000	(566.3)	20000	(566.3)	20000	(566.3)
125	2.07	16000	(453.0)	20000	(566.3)	20000	(566.3)	20000	(566.3)

Inlet Effect[A] PSIG (mbar)	0.3 (0.8)	0.4 (1.0)	0.5 (1.3)	0.5 (1.3)
Lock Up[B] PSIG (mbar)	0.3 (0.8)	0.3 (0.8)	0.4 (1.0)	0.4 (1.0)

Notes:

*Individual regulator performance may vary from data shown.

A. Change in outlet pressure for 10 PSIG inlet pressure change.

B. Outlet pressure increase required for lock up.

C. B34IMOPCO capacities are the same as B34IM's.

B34 SERIES COMMERCIAL REGULATOR, MODELS IMR, IMRV, IMN & OPCO

2 PSIG (137.8 mbar) Capacity Table (1% Absolute Droop*) 2" Outlet

Typical Capacity Info.	
Manufacturer	ROOTS Regulators
Type and model	B34IMR & OPCO
Regulator	
Inlet size:	2″ NPT
Outlet size:	2″ NPT
Position	11
Spring	Silver/red

Capacities in SCFH of 0.6 S.G. gas; base conditions of 14.7 PSIA and 60°F.

Inlet Pressure		**Orifice Size**							
PSIG	**Bar**	**3/8″**		**1/2″**		**5/8″**		**3/4″**	
3	0.030	650	(18.4)	900	(25.4)	1400	(39.6)	1650	(46.7)
5	0.035	1000	(28.3)	1700	(48.1)	2350	(66.5)	2850	(80.7)
10	0.040	1900	(53.8)	3000	(84.9)	4450	(126.0)	5000	(141.5)
20	0.045	3000	(84.9)	6000	(169.9)	7000	(198.2)	9000	(254.8)
30	0.052	4500	(127.4)	7500	(212.3)	9500	(269.0)	9800	(277.5)
40	0.60	6000	(169.9)	8500	(240.6)	9850	(278.9)	11000	(311.4)
50	0.069	6900	(195.3)	9600	(271.8)	10000	(283.0)	14000	(396.4)
60	0.138	8950	(253.4)	10000	(283.0)	15000	(424.7)	17000	(481.3)
70	0.207	9800	(277.5)	14000	(396.4)	18000	(509.7)	18900	(535.1)
80	0.345	11000	(311.4)	15500	(438.9)	20000	(566.3)	20000	(566.3)
90	0.69	11500	(325.6)	16500	(467.2)	20000	(566.3)	20000	(566.3)
100	1.38	13000	(368.1)	19000	(538.0)	20000	(566.3)	20000	(566.3)
125	2.07	13900	(393.0)	20000	(566.3)	20000	(566.3)	20000	(566.3)

Inlet Effect[A] PSIG (mbar)	0.3 (0.8)	0.4 (1.0)	0.5 (1.3)	0.5 (1.3)
Lock Up[B] PSIG (mbar)	0.3 (0.8)	0.3 (0.8)	0.4 (1.0)	0.4 (1.0)

Notes:

*Individual regulator performance may vary from data shown.

A. Change in outlet pressure for 10 PSIG inlet pressure change.

B. Outlet pressure increase required for lock up.

C. B34IMOPCO capacities are the same as B34IM's.

B34 SERIES COMMERCIAL REGULATOR, MODELS IMR, IMRV, IMN & OPCO

2 PSIG (137.8 mbar) Capacity Table (2% Absolute Droop*) 2" Outlet

Typical Capacity Info.	
Manufacturer	ROOTS Regulators
Type and model	B34IMR & OPCO
Regulator	
Inlet size:	2" NPT
Outlet size:	2" NPT
Position	11
Spring	Silver/red

Capacities in SCFH of 0.6 S.G. gas; base conditions of 14.7 PSIA and 60Â°F.

Inlet Pressure		**Orifice Size**							
PSIG	**Bar**	**3/8"**		**1/2"**		**5/8"**		**3/4"**	
3	0.030	1000	(28.3)	1200	(33.9)	1600	(45.3)	1650	(46.7)
5	0.035	1700	(48.1)	2000	(56.6)	2500	(70.7)	2900	(82.1)
10	0.040	2500	(70.7)	3400	(96.2)	4500	(127.4)	5300	(150.0)
20	0.045	4000	(113.2)	7000	(198.2)	9000	(254.8)	10100	(286.0)
30	0.052	5400	(152.9)	8000	(226.5)	10000	(283.0)	10500	(297.3)
40	0.60	7500	(212.3)	9000	(254.8)	10500	(297.3)	12500	(353.9)
50	0.069	8000	(226.5)	10000	(283.0)	15000	(424.7)	16000	(453.0)
60	0.138	10000	(283.0)	16000	(453.0)	17000	(481.3)	18000	(509.7)
70	0.207	10500	(297.3)	15000	(424.7)	19000	(538.0)	20000	(566.3)
80	0.345	12500	(353.9)	16500	(467.2)	20000	(566.3)	20000	(566.3)
90	0.69	13500	(382.2)	18200	(515.3)	20000	(566.3)	20000	(566.3)
100	1.38	15000	(424.7)	20000	(538.0)	20000	(566.3)	20000	(566.3)
125	2.07	16000	(453.0)	20000	(566.3)	20000	(566.3)	20000	(566.3)

Inlet Effect[A] PSIG (mbar)	0.3 (0.8)	0.4 (1.0)	0.5 (1.3)	0.5 (1.3)
Lock Up[B] PSIG (mbar)	0.3 (0.8)	0.3 (0.8)	0.4 (1.0)	0.4 (1.0)

Notes:

*Individual regulator performance may vary from data shown.

A. Change in outlet pressure for 10 PSIG inlet pressure change.

B. Outlet pressure increase required for lock up.

C. B34IMOPCO capacities are the same as B34IM's.

B34 SERIES COMMERCIAL REGULATOR, MODELS IMR, IMRV, IMN & OPCO

5 PSIG (137.8 mbar) Capacity Table (1% Absolute Droop*) 2" Outlet

Typical Capacity Info.	
Manufacturer	ROOTS Regulators
Type and model	B34IMR & OPCO
Regulator	
Inlet size:	2″ NPT
Outlet size:	2″ NPT
Position	11
Spring	Red

\ Capacities in SCFH of 0.6 S.G. gas; base conditions of 14.7 PSIA and 60Å°F.

Inlet Pressure		**Orifice Size**							
PSIG	**Bar**	**3/8″**		**1/2″**		**5/8″**		**3/4″**	
10	0.040	800	(22.6)	1000	(28.3)	1100	(31.1)	1500	(42.4)
20	0.045	1300	(36.8)	1550	(43.8)	1850	(52.3)	2200	(62.2)
30	0.052	2000	(56.6)	2450	(69.3)	2600	(73.6)	2800	(79.2)
40	0.60	2500	(70.7)	3000	(84.9)	3500	(99.1)	3600	(101.9)
50	0.069	2900	(82.1)	3500	(99.1)	3850	(109.0)	4200	(118.9)
60	0.138	3100	(87.7)	4700	(133.0)	5000	(141.5)	6000	(169.9)
70	0.207	3800	(107.6)	4850	(137.3)	6500	(184.0)	7500	(212.3)
80	0.345	4300	(121.7)	5400	(152.9)	7000	(198.2)	8000	(226.5)
90	0.69	4700	(133.0)	6000	(169.9)	8000	(226.5)	9500	(269.0)
100	1.38	5100	(144.4)	6600	(186.8)	9000	(254.8)	10000	(283.1)
125	2.07	6300	(178.3)	8000	(226.5)	9500	(269.0)	11000	(311.4)

Inlet Effect[A] PSIG (mbar)	0.3 (0.8)	0.4 (1.0)	0.5 (1.3)	0.5 (1.3)
Lock Up[B] PSIG (mbar)	0.3 (0.8)	0.3 (0.8)	0.4 (1.0)	0.4 (1.0)

Notes:

*Individual regulator performance may vary from data shown.

A. Change in outlet pressure for 10 PSIG inlet pressure change.

B. Outlet pressure increase required for lock up.

C. B34IMOPCO capacities are the same as B34IM's.

B34 SERIES COMMERCIAL REGULATOR, MODELS IMR, IMRV, IMN & OPCO

5 PSIG (137.8 mbar) Capacity Table (2% Absolute Droop*) 2" Outlet

Typical Capacity Info.	
Manufacturer	ROOTS Regulators
Type and model	B34IMR & OPCO
Regulator	
Inlet size:	2″ NPT
Outlet size:	2″ NPT
Position	11
Spring	Red

Capacities in SCFH of 0.6 S.G. gas; base conditions of 14.7 PSIA and 60Â°F.

Inlet Pressure		**Orifice Size**							
PSIG	**Bar**	**3/8″**		**1/2″**		**5/8″**		**3/4″**	
10	0.040	1000	(28.3)	1500	(42.4)	1700	(48.1)	1900	(53.8)
20	0.045	1900	(53.8)	2500	(70.7)	2650	(75.0)	3600	(101.9)
30	0.052	2500	(70.7)	4400	(124.5)	3950	(111.8)	5400	(152.9)
40	0.60	3300	(93.4)	5200	(147.2)	5500	(155.7)	6900	(195.3)
50	0.069	4600	(130.2)	6300	(178.3)	7100	(201.0)	8500	(240.6)
60	0.138	5400	(152.9)	7500	(212.3)	8500	(240.6)	9800	(277.5)
70	0.207	5900	(167.0)	7800	(220.8)	9000	(254.8)	10500	(297.3)
80	0.345	6500	(184.0)	8200	(232.1)	10500	(297.3)	11500	(325.6)
90	0.69	7300	(206.7)	10200	(288.8)	11500	(325.6)	12500	(353.9)
100	1.38	8000	(226.5)	11000	(311.4)	12000	(339.8)	13000	(368.1)
125	2.07	9800	(277.5)	13600	(385.1)	14500	(410.5)	15000	(424.7)

Inlet Effect[A] PSIG (mbar)	0.3 (0.8)	0.4 (1.0)	0.5 (1.3)	0.5 (1.3)
Lock Up[B] PSIG (mbar)	0.3 (0.8)	0.3 (0.8)	0.4 (1.0)	0.4 (1.0)

Notes:

*Individual regulator performance may vary from data shown.

A. Change in outlet pressure for 10 PSIG inlet pressure change.

B. Outlet pressure increase required for lock up.

C. B34IMOPCO capacities are the same as B34IM's.

B34 PERFORMANCE CURVES

7" w.c. Set Point

Inlet size:	2″ NPT
Outlet size:	2″ NPT
Intel Pressure:	20 PSIG at set
Orifice size:	3/4″
Spring Range	5.1 to 7.0" w.c.
Bolt Circle Diameter	12-1/16"
Flow Rate at Set	200 SCFH

A. 60 PSIG inlet pressure W.O.R.

B. 40 PSIG inlet pressure SET

C. 25 PSIG inlet pressure W.O.R.

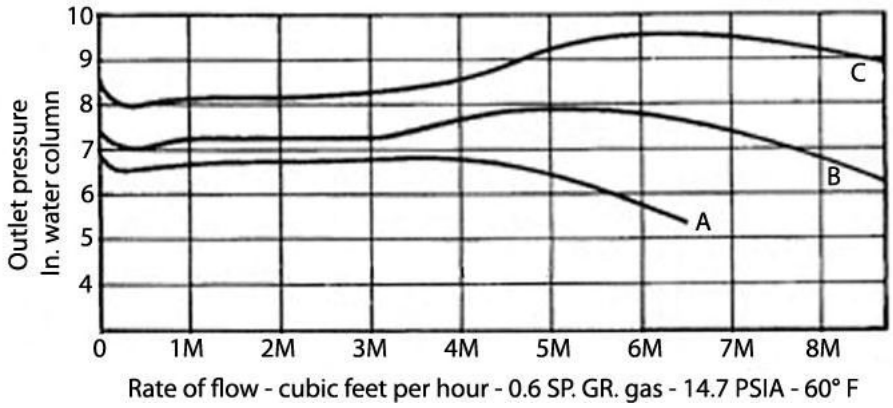

RELIEF MONITOR CURVES

7" w.c. Set Point

Inlet size:	2″ NPT
Outlet size:	2″ NPT
Intel Pressure:	20 PSIG at set
Orifice size:	3/4″
Spring Range	5.5 to 7.2" w.c.
Bolt Circle Diameter	12-1/16"
Flow Rate at Set	200 SCFH

A. 60 PSIG inlet pressure W.O.R.

B. 40 PSIG inlet pressure SET

C. 25 PSIG inlet pressure W.O.R.

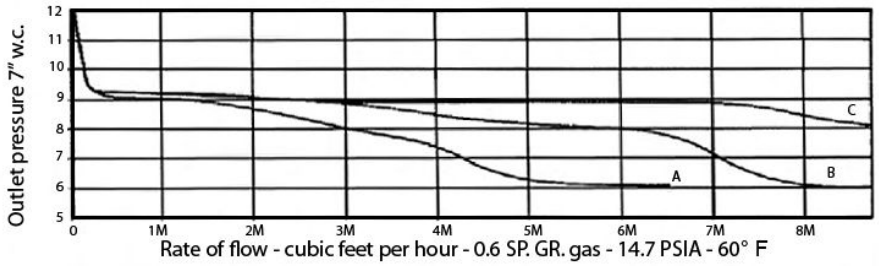

RELIEF MONITOR CURVES

2 PSIG Set Point

Inlet size:	2″ NPT
Outlet size:	2″ NPT
Intel Pressure:	40 PSIG at set
Orifice size:	3/4″
Spring Range	0.8 to 2.2" w.c.
Bolt Circle Diameter	12-1/16"
Flow Rate at Set	200 SCFH
Position	9
Loading Ring	Set at 12°

A. 60 PSIG inlet pressure W.O.R.

B. 40 PSIG inlet pressure SET

C. 25 PSIG inlet pressure W.O.R.

D. 40 PSIG inlet pressure, failed condition

E. 60 PSIG inlet pressure, failed condition

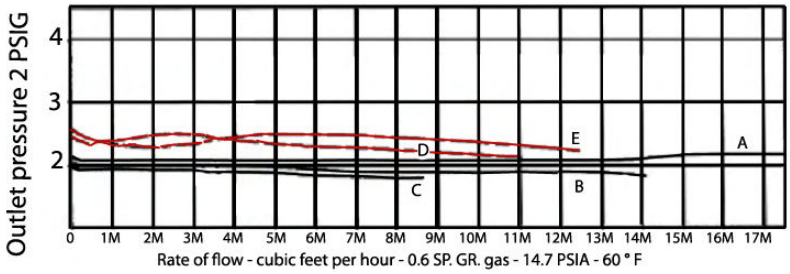

A, B, C. Normal regulator operation.

D, E. Main seat failed open with 1/8" x 1/2" diameter nylon disc. Internal monitor orifice in operation.

RELIEF MONITOR CURVES

5 PSIG Set Point

Inlet size:	2″ NPT
Outlet size:	2″ NPT
Intel Pressure:	40 PSIG at set
Orifice size:	3/4″
Spring Range	1.8 to 5.8" w.c.
Bolt Circle Diameter	12-1/16"
Flow Rate at Set	200 SCFH
Position	9
Loading Ring	Set at 0°

A. 60 PSIG inlet pressure W.O.R. 19M @4.89 PSIG

B. 40 PSIG inlet pressure SET

C. 25 PSIG inlet pressure W.O.R.

D. 40 PSIG inlet pressure failed condition

E. 60 PSIG inlet pressure failed condition

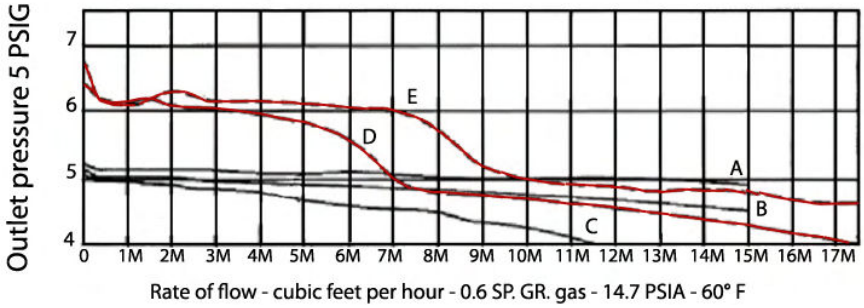

ASSEMBLY POSITIONS

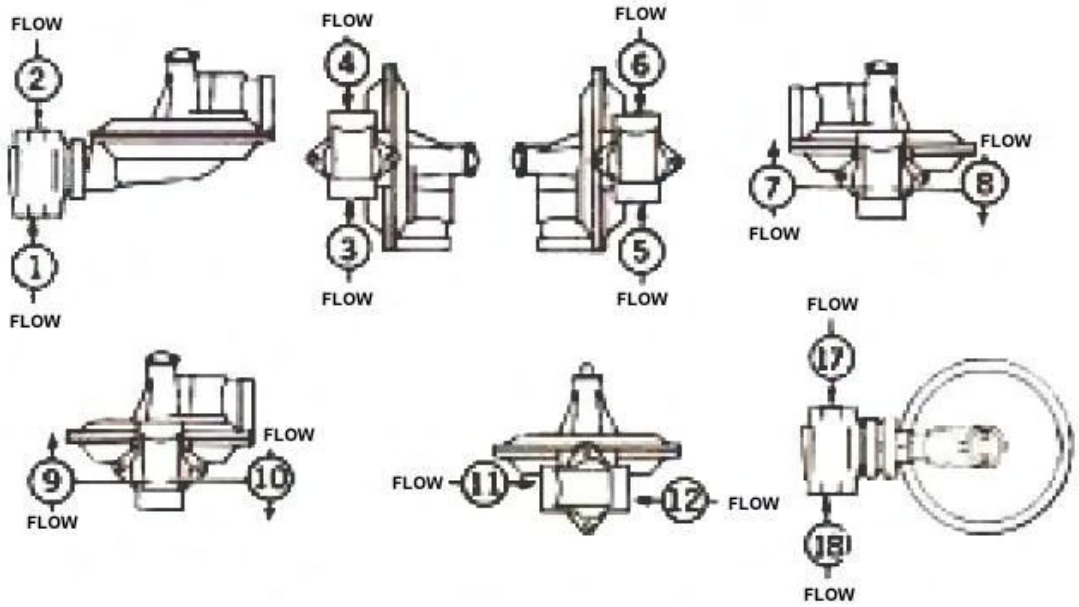

PARTS LIST

B34 R, N, M, D, IMR, IMRV, IMN

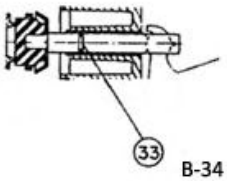

B-34 M & RM Only

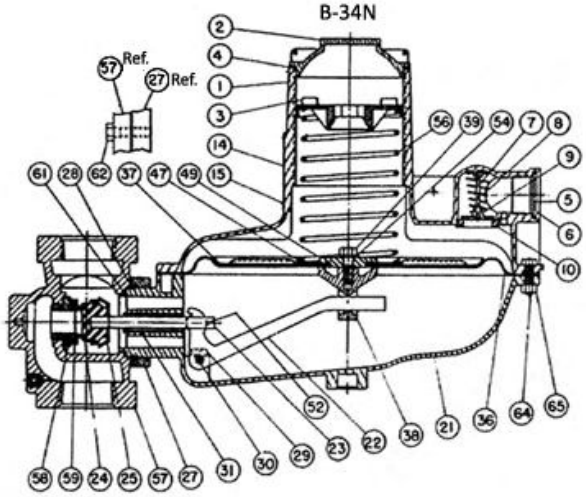

B34N Reference Schematic

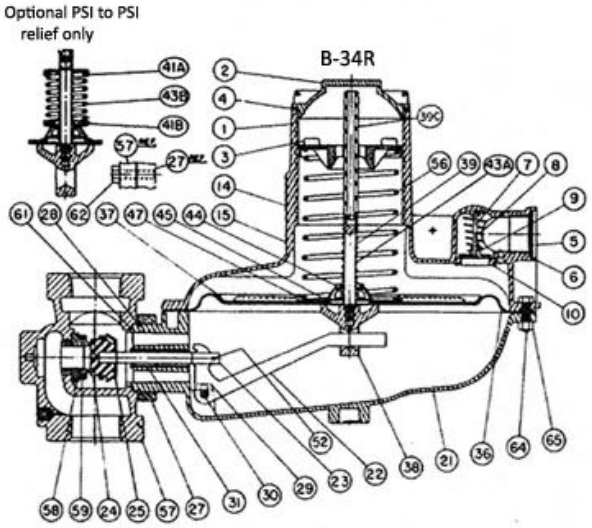

B34R Reference Schematic

Item Number	Part Number	Quantity Required per Regulator Model				Description
		D	M	R/IMR	N/IMN	
1					Upper diaphragm case assembly, please specify	
	710040	1	1	1	1	1” NPT vent, #10 breather hole, standard
	710088	1	1	1	1	1” BSP vent, #10 breather hole
	710089	1	1	1	1	1” NPT vent, no breather hole
	710100	1	1	1	1	1: NPT vent, #44 breather hole
2	760083	1	1	1	1	Seal cap
3	760233	1	1	1	1	Adjustment screw
4	765607	1	1	1	1	Seal cap gasket
5	762933	1	1	1	1	Vent screen
6	75579101	1	1	1	1	Vent screen retainer ring
7	75483401	1	1	1	1	Vent valve disc pin
8	762601	1	1	1	1	Vent valve spring, 1/2 oz.
9	765181	1	1	1	1	Vent valve disc
10	765685	1	1	1	1	Vent valve seat
14	769250	1	1	1	1	Regulator badge
15	755071	2	2	2	2	Badge screw
21					Lower diaphragm case	
	715050			1	1	B34R, IMR, N, and IMN lower diaphragm case
	715052	1	1			B34 IM and D lower diaphragm case
22					Valve lever	
	761275			1	1	B34R, IMR, N, and IMN lever
	761271	1	1			B34M, and D lever
23					Valve stem	
	754151			1	1	B34R, IMR, N, and IMN stem only
	754152			1	1	B34R, IMR, N, and IMN stem with roll pin
	754154	1	1			B34M and D stem only
24					Valve seat	
	765201	1	1	1	1	B34R, N, D, and M valve seat
	765203					BB34IMR and IMN valve seat with white stripe
25					Deflector ring	
	761721	1	1	1	1	Deflector ring, standard
	761723	1	1	1	1	Deflector ring, IM version only
27	751913SU	1	1	1	1	Valve body retainer plate-aluminum
28	755725	1	1	1	1	Retainer rate snap ring
29	755223	2	2	2	2	Valve linkage pin screw
30	754836	1	1	1	1	Valve linkage pin
33	765505		1			Valve stem O-ring
36	766301	1	1	1	1	Diaphragm
37	76104101	1	1	1	1	Upper diaphragm plate
36 and 37	720101	1	1	1	1	Diaphragm/plate assembly

Item Number	Part Number	Quantity Required per Regulator Model				Description
		D	M	R/IMR/ OPCO	N/IMN/OPCO	
38						Lower diaphragm plate
	756073					With bead, all R versions
	756075					No bead, all N versions
39	754375			1		Stop stem, assembly self-aligning
41A	761451			1		Relief spring guide, PSI relief
41B	761431			1		Relief spring guide, use with brown & green relief spring
43A				1		Relief spring: please specify
	762301					7″ w.c. above set (standard)
43B				1		Relief spring - specify color:
	762401					Brown/white .5 PSIG above set
	762403					Green 1.0 PSIG above set
44	754931			1		Stop stem guide bushing
45	76166501			1		Relief cap
47						Adjustment spring guide, please specify:
	761481			1		Adjustment spring guide, internal relief
	761483	1	1		1	Adjustment spring guide, non-relieving regulators
49	761081	1	1		1	Secondary diaphragm plate
52						Valve stem slot pin
	755007			1	1	Valve stem slot pin
	755009	1	1			Valve stem slot pin
54	755851					Diaphragm plate washer lock
56		1	1	1	1	Adjustment spring
	762351					Brown
	762353					Green
	762355					Black
	762357					Blue
	762359					Silver
	762361					Yellow
	762671					Red-Nested
	762673					White-Nested
	762321					Green/White
	762323					Silver/Red
	762365					Purple
	762341					Orange
	762345					Orange/Green
	762358					Blue/White
57		1	1	1	1	NPT valve bodies, please specify type & size
	750604					1-1/4″ x 1-1/4″
	750605					1-1/4″ x 1-1/4″ BSPT
	750607					1-1/4″ x 1-1/4″ tap
	750616					1-1/4″ x 1-1/4″ IM test tap
	750627					1-1/4″ x 1-1/2″

Item Number	Part Number	Quantity Required per Regulator Model				Description
		D	M	R/IMR/ OPCO	N/IMN/ OPCO	
57 (cont.)		1	1	1	1	NPT valve bodies, please specify type & size
	750630					1-1/4″ x 1-1/2″ 1/8″ tap
	750639					1-1/4″ x 1-1/2″ IM test tap
	750654					1-1/4″ x 2″
	750657					1-1/4″ x 2-1/8″ tap
	750666					1-1/4″ x 2″ IM test tap
	750676					1-1/2″ x 1-1/2″
	750678					1-1/2″ x 1-1/2″ BSPT
	750679					1-1/2″ x 1-1/2″ BSP
	750680					1-1/2″ x 1-1/2″ 1/8″ tap
	750693					1-1/2″ x 1-1/2″ IM test tap
	750704					1-1/2″ x 2″
	750707					1-1/2″ x 2″ 1/8″ tap
	750716					1-1/2″ x 2″ IM test tap
	750726					2″ x 2″ NPT
	750728					2″ x 2″ BSPT
	750729					2″ x 2″ BSP
	750730					2″ x 2-1/8″ tap
						Flanged valve bodies
	750754					2″ x 2″ ASA 125 flat-face flange 10″ length
	750757					2″ x 2″ ASA 125 flat-face flange 10″ length, 1/8″ tap
	750777					2″ x 2″ ASA 125 flat-face flange 7.5″ length
	750780					2″ x 2″ ASA 125 flat-face flange 7.5″ length, 1/8″ tap
	750804					3″ x 3″ ASA 125 flat-face flange
	750807					3″ x 3″ ASA 125 flat-face flange, 1/8″ tap
58		1	1	1	1	Orifice, specify type & size
	758101					orifice 1/4″
	758104					orifice 3/8″
	758107					orifice 1/2″
	758110					orifice 5/8″
	758113					orifice 3/4″
	758117					orifice 7/8″
	758150					orifice 7/32″ x 1/4″
	758151					orifice 1/4″ x 3/8″
	758154					orifice 5/16″ x 3/8″
	758157					orifice 3/8″ x 1/2″
	758160					orifice 1/2″ x 5/8″
	758163					orifice 5/8″ x 3/4″
	758166					orifice 3/4″ x 7/8″
	758169					orifice 7/8″ x 1″
61	765651	1	1	1	1	Valve body gasket, standard
62	755386-001	2	2	2	2	Retaining plate screw 5/16-18 x 1-1/4 Hex head slotted

Item Number	Part Number	Quantity Required per Regulator Model				Description
		D	M	R/IMR/ OPCO	N/IMN/OPCO	
64	755311-001	12	12	12	12	Case screw, 1/4-20 x 1 Hex head
65	755513-001	12	12	12	12	Case screw nut, 1/4-20 Hex head
						Sub-assemblies
	715016			1	1	B34R, IMR, N, and IMN Lower diaphragm case assembly
	715018		1			B34M lower diaphragm case assembly
	715063	1				Lower diaphragm case assembly
	720025			1		Diaphragm assembly, relief (standard)
	720026					Diaphragm assembly, brown relief spring
	720027					Diaphragm assembly, green relief spring
	720028	1	1	1	1	Diaphragm assembly, 10" w.c. above set point relief spring
						Torque Specifications
			Retainer Plate Screws			100 in. lbs
			Orifice			600 in. lbs
			Orifice (IM & SO)			300 in. lbs
			Margin Screws			50 in. lbs
	80002001					Seal wire, no lead 10 in.
						Special Parts
	799021					Orifice wrench
	799055					Adjustment wrench
	799081					Loading ring position tool
	754852					Vent valve reducer #31
	754853					Vent valve reducer #44
	80002002					Seal wire, no lead 24 in.

IM Orifice Assembly Schematic

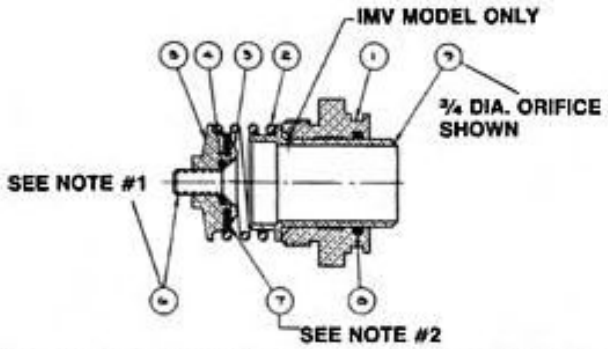

Note 1: Apply Loctite (screw-lock) to end threads of item #6 before assembling in valve body.

Note 2: Cement item #7 to item #5 before assembling valve body.

Internal Monitor (IM) Orifice Assembly Numbers						
Item Number	**Part Number**	**759127**	**759125**	**759123**	**759121**	**Description**
9	758231	1	-	-	-	3/4" diameter sliding orifice
9	758241	-	1	-	-	5/8" diameter sliding orifice
9	758238	-	-	-	1	1/2" diameter sliding orifice
9	758235	-	-	-	1	3/8" diameter sliding orifice
8	765501	1	1	1	1	O-ring
7	765741	1	1	1	1	Monitor seat
6	755131	1	1	1	1	Socket flat head screw
5	756103	1	1	1	1	Anchor
4	765509	1	1	1	1	O-ring
3	754511	1	1	1	1	Anchor plate
2	762311	1	1	1	1	Cut off spring
1	758221	1	1	1	1	Stationary orifice
All of the above parts are interchangeable						

Internal Monitor (IM) Orifice Assembly with Vent Hole "V" Option						
Item Number	**Part Number**	**759127**	**759125**	**759123**	**759121**	**Description**
9	758251	1	-	-	-	3/4" diameter sliding orifice
9	758255	-	1	-	-	38" diameter sliding orifice
9	758258	-	-	1	-	1/2" diameter sliding orifice
9	758261	-	-	-	1	5/8" diameter sliding orifice
8	765501	1	1	1	1	O-ring
7	765741	1	1	1	1	Monitor seat
5	756103	1	1	1	1	Anchor
4	765509	1	1	1	1	O-ring
3	754511	1	1	1	1	Anchor plate
2	762311	1	1	1	1	Cut off spring
1	758221	1	1	1	1	Stationary orifice
			All of the above parts are interchangeable			

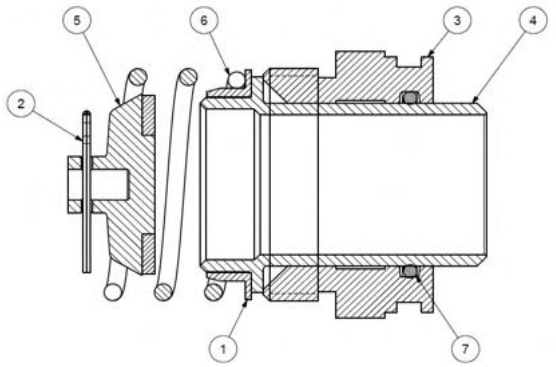

Item No	Qty	Part Number	Description
1	1	755856	Washer, Flanged B34IMOPCO
2	1	755932	Cotter Pin B34IMOPCO
3	1	See IM Orifice assy	Orifice - Stationary
4	1	See IM Orifice Assy	Straight Orifice
5	1	759202	Orifice Plate Assembly B34IMOPCO
6	1	762370	Spring Compression B34IMOPCO
7	1	765501	O-Ring B/CL34IM Orifice Seal Cap

VENT LINES FOR REGULATORS

When constructing vent lines to be attached to regulators installed indoors, follow a few basic rules:

a. Never use pipe sizes smaller than the vent size; smaller pipe sizes restrict the gas flow. If a long gas run must be used, ROOTS Regulators advises increasing the pipe one nominal size every ten feet to keep the flow restriction as low as possible.

b. Keep the vent line length as short as possible to minimize the restriction and reduce the vent's tendency to cause regulator pulsation.

c. Support the vent pipe to eliminate strain on the regulator diaphragm case.

d. Always point outdoor vent pipes in the downward position to reduce the possibility of rain, snow, sleet, and other moisture entering the pipe. Install a bug screen in the end of the pipe.

e. Do not locate the vent line terminus near windows, fans, or other ventilation equipment. See the installation instructions furnished with the regulator.

f. Adhere to all applicable codes and regulations.

g. If your vent pipe causes regulator pulsation, consult your sales representative or manufacturer.

h. ROOTS Regulators strongly recommends running a separate vent line for each regulator. Headers with various installed devices can cause regulator malfunction.

Caution Ensure the end of the vent line is away from ANY potential ignition sources. It is the installer's responsibility to ensure the vent line is exhausting to a safe environment.

INSTALLATION

Caution Remove all shipping plugs from the inlet, outlet, and vent of any ROOTS Regulator before installation.

Keep the piping interior (inner diameter), ROOTS Regulator inlet, and regulator outlet free of dirt, chemical sealant (pipe dope), Teflon tape, or other debris. Materials in piping or ROOTS Regulator inlet or outlet creating a loss of pressure control.

Gas must flow through the ROOTS Regulator valve body in the same direction as the arrow on the regulator body. Gas flowing in the wrong direction may cause an over-pressure condition and damage the ROOTS Regulator.

Apply a gas resistant pipe joint sealant on the male (exterior) pipe threads. Do not use any type of Teflon tape on ROOTS Regulator installations. Do not apply pipe joint sealant on the female (interior) pipe threads of the ROOTS Regulator as joint materials could lodge in the regulator creating a loss of pressure control.

During product installation, do not clamp the valve body in a vice, this may lead to permanent damage rendering a ROOTS Regulator that is not fit for service. During product installation, use of excessive force and unsafe practices can lead to permanent damage rendering a ROOTS Regulator that is not fit for service. It is recommended to not exceed 3 full turns past hand tight into the ROOTS Regulator valve body per SAE standard AS71051. Do not use oversized pipe wrenches and/or "Cheater" bars during the installation of ROOTS Regulators which can damage valve body from an over torque situation.

Note The diaphragm casing may be mounted in any position (through a full 360° angle) relative to the regulator body.

OPCO Instruction

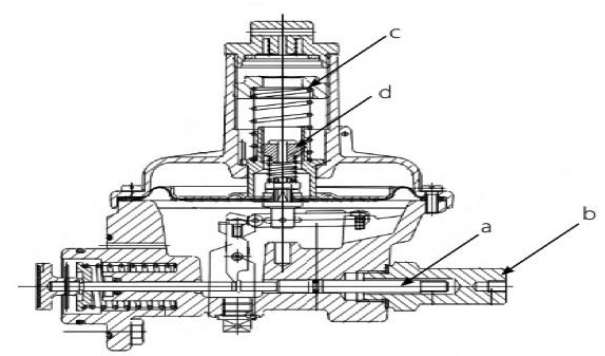

Commissioning SSV1 OPCO - Unscrew the cap (b) and screw it onto the valve rod (a). Slowly pull out the valve rod until the output pressure in the control unit is established, the lever system of the SAV engages and the valve rod remains open. **Only possible if the outlet pressure in the main regulator is less than opco set point!** Then screw the cap (b) back on.

OUTDOOR INSTALLATION

When installing B-series regulators outdoors:

a. Always position the regulator vent so moisture (rain, snow) or foreign particles cannot enter the vent opening.
b. Dresser Utility Solutions recommends positioning the vent downward to avoid the entry of moisture or foreign materials into the vent.
c. Locate the vent away from building eaves, window openings, or building air intakes.
d. If applicable, mount the regulator vent above the site's expected snow level.
e. Warning Schedule periodic inspections to check the regulator vent for foreign materials as outlined in DOT PHMSA-RSPA-2004-19856.

INDOOR INSTALLATION

When installing B-series regulators indoors, pipe the vent to outside atmosphere using:

a. The shortest pipe length
b. The fewest possible pipe elbows
c. A pipe diameter as equal to the vent size (or larger)

Warning Using a vent pipe smaller than the vent connection will limit the regulator's internal relief valve capacity. Protect the pipe's outlet end from moisture and the entry of foreign materials. Specify the correct vent size and pipe threads to make the regulator's vent pipe connection.

START-UP PROCEDURE

a. Mount a pressure gauge downstream of the regulator to monitor the downstream pressure.
b. With the downstream pressure valve closed, slowly open the inlet valve. The outlet pressure should rise to slightly more than the set-point. Verify there are no leaks and all connections are tight.
c. The regulator was pre-set at the factory to match order specifications. If necessary, adjust the outlet pressure by removing the seal cap on the top of the pilot spring housing and adjusting the ferrule or screw inside the pilot spring housing using a large flat-head screwdriver. With a small amount of gas flowing through the regulator, rotate the pilot ferrule clockwise to raise the outlet pressure or counter-clockwise to lower the outlet pressure.
d. Replace the seal cap and check for leaks after the desired outlet pressure is achieved.

The regulator is ready for operation.

SAFETY WARNING

This product, as of the date of manufacture, is designed and tested to conform to all governmental and industry safety standards as they may apply to the manufacturer. The purchaser/user of this product must comply with all fire control, building codes, and other safety regulations governing the application, installation, operation, and general use of this regulator to avoid leaking gas hazards resulting from improper installation, startup or use of this product.

ROOTS Regulators strongly recommends installation by a qualified professional and periodic inspection of pressure regulators (inspections may be required by local applicable codes or regulations).

Inspections should include checking for gas quality, cycle numbers, external environmental changes, and operating conditions that impact wear on the regulator's moving parts. To ensure safe and efficient operation of this product, replace worn or damaged parts found during inspection.

Limited Warranty

ROOTS Regulators, Inc. 16240 Port Northwest Drive Houston, TX 77041, warrants this gas product against defects in materials and workmanship for the earlier of one (1) year from the date the product is shipped by ROOTS Regulators or a period of one year from the date the product is installed by ROOTS Regulators at the original purchaser's site. During such one-year period, provided that the original purchaser continues to own the product, ROOTS Regulators will, at its sole option, repair any defects, replace the product or repay the purchase price.

- This warranty will be void if the purchaser fails to observe the procedures for installation, operation or service of the product as set forth in the Operating Manual and Specifications for the product or if the defect is caused by tampering, physical abuse or misuse of the product.
- ROOTS REGULATORS SPECIFICALLY DISCLAIMS ALL IMPLIED WARRANTIES INCLUDING THOSE OF MERCHANTABILITY OR OF FITNESS FOR A PARTICULAR PURPOSE. UNDER NO CIRCUMSTANCES WILL ROOTS Regulators BE LIABLE FOR INCIDENTAL OR CONSEQUENTIAL DAMAGES OF ANY KIND WHATSOEVER.
- ROOTS Regulators's liability for any claim of any kind, including negligence and breach of warranty for the sale and use of any product covered by or furnished, shall in no case exceed the price allocable to the product or part thereof which gives rise to the claim.
- In the event of a malfunction of the product, consult your ROOTS Regulators Service Representative or ROOTS Regulators Inc., 16240 Port Northwest Drive Houston, TX 77041. See ROOTS Regulators Terms and Conditions of Sale for the full and complete terms of the Limited Warranty.

Ordering Information

Specify:

1. Inlet and outlet connection size and type
2. Model number
3. Outlet pressure desired
4. Pilot needed
5. Inlet pressure range
6. Type of gas and maximum capacity required
7. Assembly position number (see chart above)
8. Special requirements such as tagging, 1/8" pipe plug tap, seal wire, etc.

ROOTS Regulator + ROOTS Meter Compatibility

Small	Regular	Large
11M175	*2M-7M*	*23M175*

ROOTS Regulators

16240 Port Northwest Drive

Houston, TX 77041

T: 1-800-521-1114

F: 1-800-335-5224

© 2025 Natural Gas Solutions North America, LLC – All rights reserved. Dresser Utility Solutions reserves the right to make changes in specifications and features shown herein, or discontinue the product described at any time without notice or obligation. Contact your Dresser Utility Solutions representative for the most current information. The Dresser Logo and all Trademarks containing the term "Dresser" are the property of Dresser, LLC, a subsidiary of Baker Hughes.

DRESSER UTILITY SOLUTIONS

www.dresserutility.com