DRESSER UTILITY SOLUTIONS

ROOTS REGULATORS

B42 Series Regulator

Residential and Light Commercial Regulator

The B42 is a spring loaded self-operated regulator with internal relief option. The B42 features a molded diaphragm, 6:1 lever ratio and one inch vent. The benefit is a lighter more compact unit that provides the power, capacity and relief performance of larger regulators.

Applications

Consistent pressure reduction of gas for typical domestic and light commercial applications.

Option Designations

- N No Internal Relief
- R Internal Relief
- HP Available – See spring chart

B42N

- The B42N is a spring-loaded, self-operated regulator with no internal relief (N) valve. This model can be used on low or intermediate inlet pressures where an internal relief or other type of over-pressure protection device is not required.

B42R

- The B42R is the internal relief (R) version of the B42 Series. The large 1" internal relief valve provides exceptional relief capacity.

Designed to increase Your Customer's Satisfaction and Reduce Your Total Costs

- The model B42 is uniquely constructed to give utilities the edge they need in an increasingly complex and competitive market place. The model B42 excels with benefits of size, safety, performance, and cost. The B42 also offers three connection versions providing the greatest flexibility for your regulations needs. In addition, due to inventory and manufacturing enhancements, this product can be delivered with unparalleled speed and scheduling dependability.

ANSI® CSA® AGA®

Model B42 Series regulators are certified to, B109.4/CSA 6.18, and Z21.80/CSA 6.22 Class I & II specifications.

Compact Size

- While the model B42 is more compact than traditional regulators, it was also designed to meet customer expectations for safety and long field life. The B42 is designed to consolidate product usage for both residential and light commercial applications

Features

- True bubble tight lock-up
- Interchangeable aluminum orifice
- 12.6 sq. in. of diaphragm area
- Molded deep convolution diaphragm with o-ring seal
- Plated steel 6:1 lever
- One piece molded Buna-N valve seat
- Delrin® vent valve with Buna-N seat
- Spring-loaded internal relief valve assembly
- 1" and 3/4" threaded vent with stainless steel screen
- Fiberglass reinforced polyethylene seal cap with integral relief valve stop
- Field interchangeable adjustment spring

SHIPPING WEIGHT

B42: 12 regulators per box / 300 per skid Box weight: 48 lbs.

B42 DIMENSIONS (INCHES)/OPERATIONAL SCHEMATIC

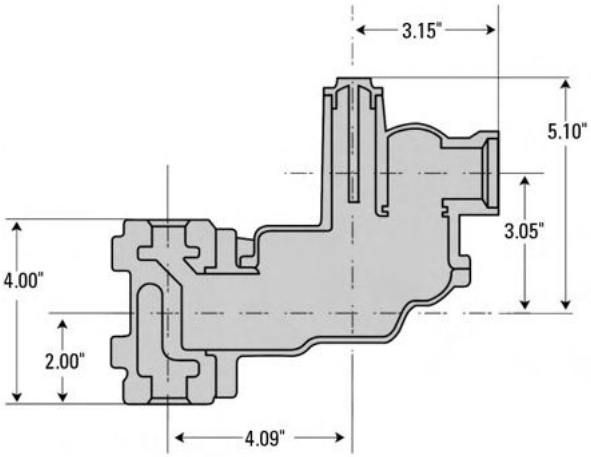

Straight body connection

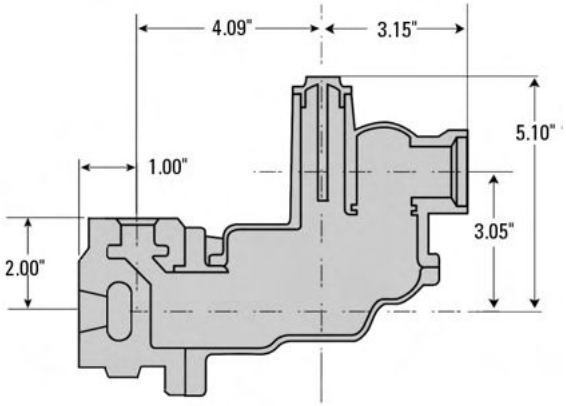

90° Angle body connection

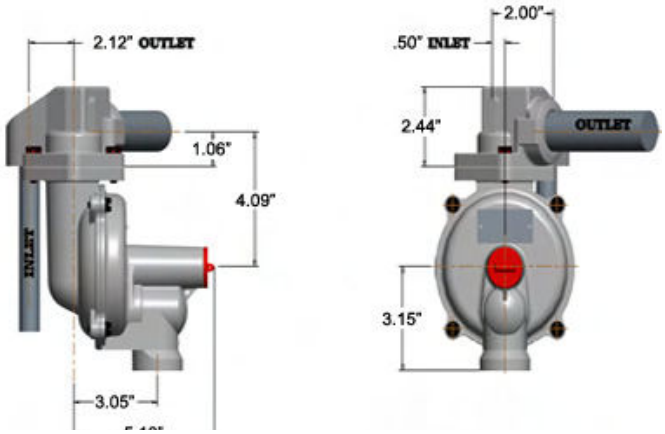

Compact body connection

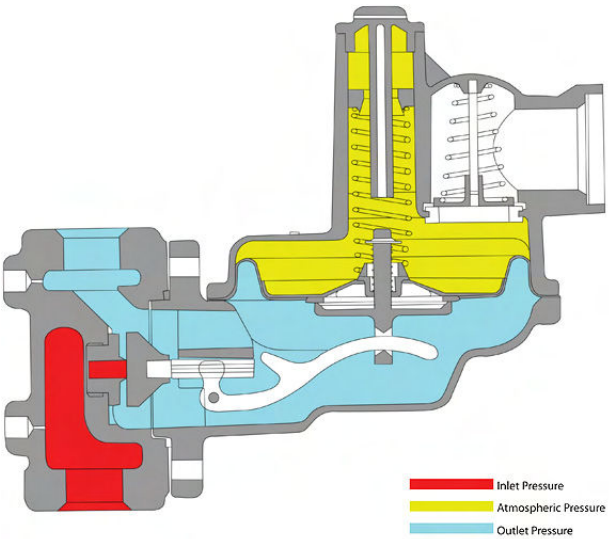

Operational schematic

SPRING DATA, SPRING COLOR OUTLET PRESSURE RANGE

Colors	Outlet Pressure Range**
Standard Spring Data	
Green	5 - 7" w.c.
Brown	6 - 8" w.c.
Blue	8 - 14" w.c.
Silver	12 - 28" w.c.
Yellow/Black	1 - 2 PSIG
Purple	1.25 - 2.25 PSIG
Alternate Spring Data	
Orange	5.5 - 9" w.c.
Dark Green (762003)	4 - 9" w.c.
Dark Green (762117)	6 - 16" w.c.
High Pressure Spring Data	
Yellow	2 - 4 PSIG
White	4 - 5 PSIG
Relief Spring Data	
Purple	7" w.c. above set point
Orange	5" w.c. above set point
Red	6" w.c. above set point
Black	9" w.c. above set point

*Note Ranges are approximations. Please contact manufacturer to obtain the best spring for your application. **Warning Adjustment springs are not interchangeable between B42 and B42HP.

ORIFICE DATA, WIDE OPEN FLOW COEFFICIENTS AND MAXIMUM PRESSURES

Orifice Size (inches)	K-Factor	Maximum Allowable Operating Pressure(MAOP)	Emergency Inlet Pressure (PSIG)	Emergency Outlet Pressure (PSIG)	
				No damage+	Containment++
1/8	30	125 PSIG +	300	30	60
1/8 x 3/16	30	125 PSIG +	300	30	60
3/16	71	125 PSIG +	200	30	60
1/4	127	60 PSIG	150	30	60
5/16	193	35 PSIG	100	30	60
3/8	290	20 PSIG	75	30	60
1/2	416	10 PSIG	40	30	60
1/2 x 9/16	416	10 PSIG	40	30	60

+No Damage – Max Pressure that regulator can withstand without damage to internal parts (Diaphragm components, lever, etc.)
++ Containments – Max pressure that the regulator can withstand without bursting.
*Note: Internal relief starts at 7" above set point for all regulators. On pound set: 2lbs will relieve at 2.4lbs, 3lbs at 3.6lbs, 5lbs at 6.4lbs

OPERATING TEMPERATURE RANGE

- -20°F to 150°F
- Silicone valve seats available for applications below -20°F

ADDITIONAL SPECIFICATIONS

Available Vent Sizes	1" NPT, 3/4" NPT
Other Available Options	Seal wire to indicate unapproved tampering
	1/8" pipe plug tap on both inlet and outlet side of valve body

CONSTRUCTION

ROOTS Regulators takes pride in delivering products with the utmost concern for safety, quality, and customer satisfaction.

Construction materials

Valve body	High tensile strength cast iron (ASTM A-126)
Orifice	Aluminum or brass
Valve seat	Buna-N or silicone
Valve stem	Die cast zinc
Lever pin	Stainless steel (Type 303)
Lever	Zinc and dichromate plated steel (AISI C1010)
Upper diaphragm plate	Zinc and dichromate plated steel (14 gage steel)
Lower diaphragm plate	Polyester
Diaphragm	Buna-N with reinforcing fabric
Vent valve/seat	Neoprene
Vent screen	Stainless steel (16 mesh)
Adjustment ferrule	Delrin
Seal cap	Fiberglass reinforced polyethylene
Diaphragm case	B42 N and R Regulator: Die cast aluminum (ASTM B85 Alloy SC84A)
Fastener plating	Dacromet with Plus Black

**All ROOTS regulators are true bubble tight lock up type regulators per ANSI B109.4 and Z21.80 where it applies.

VALVE BODY SIZES

Inlet (inches)	Outlet (inches)	Compact	90° Angle	Straight
1/2	1/2	---	X	X
3/4	3/4	X	X	X
3/4	1	X	X	X
3/4	1-1/4	---	---	X
1	1	---	X	X
1	1-1/4	---	---	X
1-1/4	1-1/4	---	---	X

Note X indicates that the valve body is available in that configuration.

COMPLIANCE

B42 (internal relief model) compliance with ANSI Z21.80/CSA 6.22, Line Pressure Regulators

Model B42R used with a 1" vent connection is compliant with ANSI Z21.80/CSA 6.22 in the configurations noted and shown in the following tables.

With inlet pressures up to 5 PSIG:

Orifice Size	Set Point	Maximum Vent Line Length (ft.)*	Number of Elbows**
1/8"	Up to 14 w.c.	50	4 or less
1/8" x 3/16"	Up to 14 w.c.	50	4 or less
3/16"	Up to 14 w.c.	40	4 or less
1/4"	Up to 7" w.c.	40	4 or less
5/16"	Up to 7" w.c.	15	4 or less

*Clean 1" black steel pipe

** For each elbow greater than 4 elbows, subtract 2.6 ft. from the maximum vent line length.

ANSI American National Standards Institute	ANSI Z21.80/CSA 6.22
What is it?	This standard specifies requirements for the design, performance, and safety of gas regulators, ensuring they meet industry criteria for use in gas systems.
Where does it apply?	ANSI Z21.80/CSA 6.22 applies to line pressure regulators or all regulators after the service regulator. These certifications indicate compliance with relevant standards for safety and performance in the United States (ANSI) and Canada (CSA).
Where does it *not* apply?	These standards do not apply to service regulators because they are specifically intended for gas pressure regulators within appliance piping systems.
What is a line pressure regulator?	A line pressure regulator covers all pipe sizes and outlet pressures, as long as it is installed after the service regulator.

CORRECTION FACTORS FOR NON-NATURAL GAS APPLICATIONS

The B42 may be used to control gases other than natural gas. To determine the capacity for gases other than natural gas, multiply the values within the capacity tables by a correction factor. The table below lists the correction factors for some of the more common gases.

Gas Type	Specific Gravity	Correction Factor (CF)
Air	1.00	0.77
Butane	2.01	0.55
Carbon Dioxide (Dry)	1.52	0.63
Carbon Monoxide (Dry)	0.97	0.79
Natural Gas	0.60	1.00
Nitrogen	0.97	0.79
Propane	1.53	0.63
Propane-Air-Mix	1.20	0.71

To calculate the correction factor for gases not listed in the table above, use the gases' specific gravity and insert it in the formula listed below:

Correction Factor (CF) = $\sqrt{\frac{SG_1}{SG_2}}$

Where:

SG1 = Specific gravity of the gas in which the capacity is published.
SG2 = Specific gravity of the gas to be controlled.

Wide Open Flow Calculations

For wide-open orifice flow calculations use the following equations:

For $\frac{P_1}{P_2} < 1.89$ use: $Q = K\sqrt{P_2(P_1 - P_2)}$

For $\frac{P_1}{P_2} > 1.89$ use: $Q = \frac{KP_1}{2}$

Where: P1 = Absolute Inlet Pressure (PSIA)
Q = Flow Rate (SCFH)
P2 = Absolute Outlet Pressure (PSIA)
K = Orifice Coefficient (SCFH/PSI)

Disclaimers for Sizing Charts

If your exact demands are not found in the capacity charts, follow the link below for sizing.

https://regulatorsizing.dresserngs.com/RegulatorSizing/disclaim.html

To convert standard cubic feet per hour (SCFH) of natural gas to British thermal units (BTU), you can use the approximate conversion that 1 cubic foot of natural gas yields about 1,030 BTU. Therefore, multiply the SCFH value by 1,030 to get the BTU equivalent.

B42 SERIES RESIDENTIAL REGULATOR, MODELS N AND R

7" w.c. (17 mbar) Capacity Table (1" Droop*), 3/4" Outlet Valve Bodies

Typical Capacity Info.	
Manufacturer	ROOTS Regulators
Type and model	B42 N, R
Inlet size	3/4" NPT
Outlet size	3/4" NPT
Spring color	Brown

Capacities in SCFH (m3/hr) of 0.6 S.G. gas; base conditions of 14.7 PSIA and 60° F.

Inlet Pressure		**Orifice Size**							
PSIG	**BAR**	**1/8"**	**1/8 x 3/16"**	**3/16"**	**1/4"**	**5/16"**	**3/8"**	**1/2"**	**1/2 x 9/16"**
0.5	0.038	55 (1.6)	60 (1.7)	70 (2.0)	80 (2.3)	95 (2.7)	210 (5.9)	270 (7.6)	280 (7.9)
1	0.069	60 (1.7)	80 (2.3)	85 (2.4)	200 (5.7)	275 (7.8)	300 (8.5)	360 (10.2)	385 (10.9)
2	0.1	80 (2.3)	95 (2.7)	225 (6.4)	250 (7.1)	365 (10.3)	425 (12.0)	495 (14.0)	485 (13.7)
3	0.2	105 (3.0)	225 (6.4)	290 (8.2)	350 (9.9)	470 (13.3)	525 (14.9)	595 (16.8)	625 (17.7)
5	0.3	210 (5.9)	280 (7.9)	400 (11.3)	500 (14.2)	600 (17.0)	715 (20.2)	805 (22.8)	830 (23.5)
10	0.7	340 (9.6)	390 (11.0)	600 (17.0)	850 (24.1)	940 (26.6)	1085 (30.7)	1300 (36.8)	1350 (38.2)
15	1.0	425 (12.0)	470 (13.3)	850 (24.1)	1100 (31.1)	1300 (36.8)	1415 (40.1)		
20	1.4	550 (15.6)	550 (15.6)	1045 (29.6)	1300 (36.8)	1500 (42.5)	1420 (40.2)		
30	2.1	700 (19.8)	700 (19.8)	1400 (39.6)	1600 (45.3)	1800 (51.0)			
40	2.8	850 (24.1)	870 (24.6)	1700 (48.1)	1900 (53.8)				
50	3.5	1000 (28.3)	1020 (28.9)	1900 (63.8)	2000 (56.6)				
60	4.1	1150 (32.6)	1190 (33.7)	2000 (56.6)	2100 (59.5)				
80	5.5	1500 (42.5)	1525 (43.1)	2200 (62.3)					
100	6.9	1800 (51.0)	1820 (51.5) (41.8)	2350 (66.5)					
125	8.6	2150 (62.3)	2200 (62.2)	2475 (70)					
Inlet Effect A (inches w.c.)		0.1	0.2	0.3	0.4	0.4	0.6	0.8	1.0
Lock Up B (inches w.c.)		0.4	0.4	0.4	0.5	0.6	0.6	0.9	1.1

Notes:

A. Change in outlet pressure for 10 PSIG inlet pressure change.
B. Outlet pressure increase required for lock up.

*Individual regulator performance may vary from data shown.

Complies with ANSI Z21.80/CSA 6.22 Class I

Do not operate orifice in shaded inlet pressure area.

B42 SERIES RESIDENTIAL REGULATOR, MODELS N AND R

7" w.c. (17 mbar) Capacity Table (1" Droop*), 1" Valve Bodies

Typical Capacity Info.	
Manufacturer	ROOTS Regulators
Type and model	B42 N, R
Inlet size	3/4" NPT
Outlet size	1" NPT
Spring color	Brown

Capacities in SCFH (m3/hr) of 0.6 S.G. gas; base conditions of 14.7 PSIA and 60° F.

Inlet Pressure		**Orifice Size**							
PSIG	**BAR**	**1/8"**	**1/8 x 3/16"**	**3/16"**	**1/4"**	**5/16"**	**3/8"**	**1/2"**	**1/2 x 9/16"**
0.5	0.038	65 (1.8)	70 (2.0)	90 (2.5)	140 (3.9)	175 (4.9)	230 (6.5)	300 (8.5)	320 (9.0)
1	0.069	80 (2.3)	110 (3.1)	140 (3.9)	250 (7.1)	295 (8.3)	325 (9.2)	400 (11.3)	450 (12.7)
2	0.1	100 (2.8)	180 (5.1)	245 (6.9)	275 (7.8)	375 (10.6)	455 (12.9)	600 (17.0)	700 (19.8)
3	0.2	170 (4.8)	235 (6.6)	310 (8.8)	350 (9.9)	500 (14.2)	575 (16.3)	800 (22.7)	910 (25.8)
5	0.3	215 (6.1)	300 (8.5)	420 (11.9)	525 (14.8)	725 (20.5)	825 (23.4)	1100 (31.1)	1230 (34.8)
10	0.7	360 (10.2)	420 (11.9)	625 (17.7)	890 (25.2)	1100 (31.1)	1300 (36.8)	1550 (43.9)	1720 (48.7)
15	1.0	445 (12.6)	490 (13.8)	895 (25.3)	1200 (34.0)	1550 (43.9)	1650 (46.7)		
20	1.4	575 (16.2)	600 (16.9)	1100 (31.1)	1450 (41.1)	1850 (52.4)	2000 (56.6)		
30	2.1	735 (20.8)	765 (21.6)	1470 (41.6)	2000 (56.6)	2300 (65.1)			
40	2.8	890 (25.2)	920 (26.0)	1750 (49.6)	2200 (62.3)				
50	3.5	1050 (29.7)	1100 (31.1)	2150 (60.9)	2500 (70.8)				
60	4.1	1210 (34.2)	1260 (35.6)	2300 (65.1)	2500 (70.8)				
80	5.5	1575 (44.6)	1590 (45.0)	2400 (68.0)					
100	6.9	1890 (53.5)	1870 (53.0)	2500 (70.8)					
125	8.6	2200 (62.3)	2280 (63.0)	2500 (70.8)					
Inlet Effect A (inches w.c.)		0.13	0.13	0.20	0.36	0.67	0.77	2.20	2.20
Lock Up B (inches w.c.)		0.5	0.5	0.6	0.7	0.8	0.9	1.2	1.2

Notes:

A. Change in outlet pressure for 10 PSIG inlet pressure change.
B. Outlet pressure increase required for lock up.

*Individual regulator performance may vary from data shown.

Complies with ANSI Z21.80/CSA 6.22 Class I

Do not operate orifice in shaded inlet pressure area.

B42 SERIES RESIDENTIAL REGULATOR, MODELS N AND R

7" w.c. (17 mbar) Capacity Table (1" Droop*), 1-1/4" Outlet Valve Bodies

Typical Capacity Info.	
Manufacturer	ROOTS Regulators
Type and model	B42 N, R
Inlet size	1-1/4" NPT
Outlet size	1-1/4" NPT
Spring color	Brown

Capacities in SCFH (m3/hr) of 0.6 S.G. gas; base conditions of 14.7 PSIA and 60° F.

Inlet Pressure		**Orifice Size**							
PSIG	**BAR**	**1/8"**	**1/8 x 3/16"**	**3/16"**	**1/4"**	**5/16"**	**3/8"**	**1/2"**	**1/2 x 9/16"**
0.5	0.03	75 (2.1)	80 (2.3)	100 (2.8)	150 (4.2)	195 (5.5)	300 (8.4)	350 (9.9)	380 (10.7)
1	0.06	85 (2.4)	120 (3.4)	150 (4.2)	300 (8.4)	320 (9)	355 (10.0)	440 (12.4)	485 (13.7)
2	0.1	110 (3.1)	200 (5.6)	320 (9)	330 (9.3)	410 (11.6)	475 (13.4)	630 (17.8)	735 (20.8)
3	0.2	185 (5.2)	310 (8.7)	340 (9.6)	430 (12.1)	530 (15.0)	595 (16.8)	840 (23.7)	955 (27.0)
5	0.3	300 (8.4)	410 (11.6)	470 (13.3)	575 (16.2)	760 (21.5)	870 (24.6)	1160 (32.8)	1300 (36.8)
10	0.7	380 (10.7)	550 (15.5)	700 (19.8)	930 (26.3)	1150 (32.5)	1500 (42.5)	1625 (46.0)	1810 (51.2)
15	1.0	500 (14.1)	670 (18.9)	970 (27.5)	1260 (35.6)	1625 (46.0)	1750 (49.5)		
20	1.4	600 (16.9)	800 (22.7)	1250 (35.4)	1540 (43.6)	2060 (58.3)	2400 (67.9)		
30	2.1	770 (21.8)	1020 (28.8)	1650 (46.7)	2300 (65.1)	2500 (70.8)			
40	2.8	930 (26.3)	1230 (34.8)	1820 (51.5)	2500 (70.8)				
50	3.5	1120 (31.7)	1470 (41.6)	2260 (63.9)	2500 (70.8)				
60	4.1	1270 (35.9)	1720 (48.7)	2500 (70.8)	2500 (70.8)				
80	5.5	1630 (46.1)	2180 (61.7)	2500 (70.8)					
100	6.9	1980 (56.0)	2500 (70.8)	2500 (70.8)					
125	8.6	2300 (65.1)	2500 (70.8)	2500 (70.8)					
Inlet Effect A (inches w.c.)		0.13	0.13	0.20	0.36	0.67	0.77	2.20	2.20
Lock Up B (inches w.c.)		0.5	0.5	0.6	0.7	0.8	0.9	1.2	1.2

Notes:

A. Change in outlet pressure for 10 PSIG inlet pressure change.
B. Outlet pressure increase required for lock up.

*Individual regulator performance may vary from data shown.

Complies with ANSI Z21.80/CSA 6.22 Class I

Do not operate orifice in shaded inlet pressure area.

B42 PERFORMANCE CURVES

7" w.c. Set Point

Model	B42 R
Inlet size	3/4" NPT
Outlet size	1" NPT
Orifice size	3/16"
Spring	Brown

All test results are reported at a base of 14.7 PSIA at 60° F and with 0.6 S.G. gas.

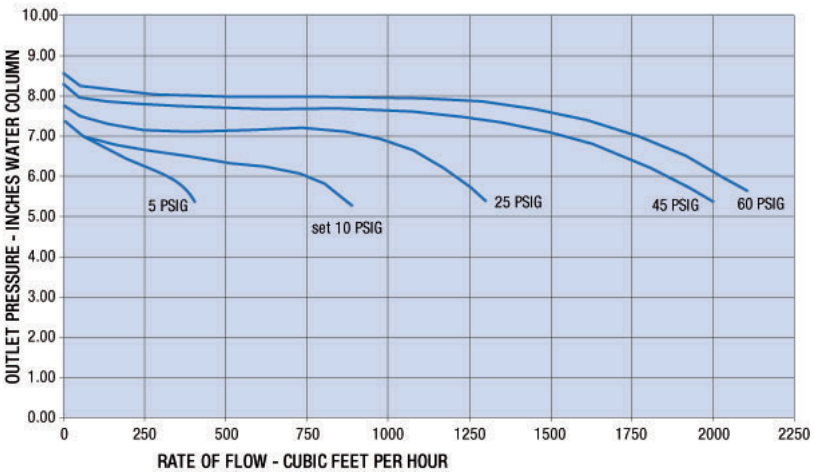

RELIEF CURVES

7" w.c. Set Point

Vent size	1″ NPT
Failure Type – Lever Disconnect	

All test results are reported at a base of 14.7 PSIA at 60° F and with 0.6 S.G. gas.

Regulator set at 7.0" w.c. for relief testing with 40 PSI inlet pressure @ 50 SCFH as per ANSI B109.4.

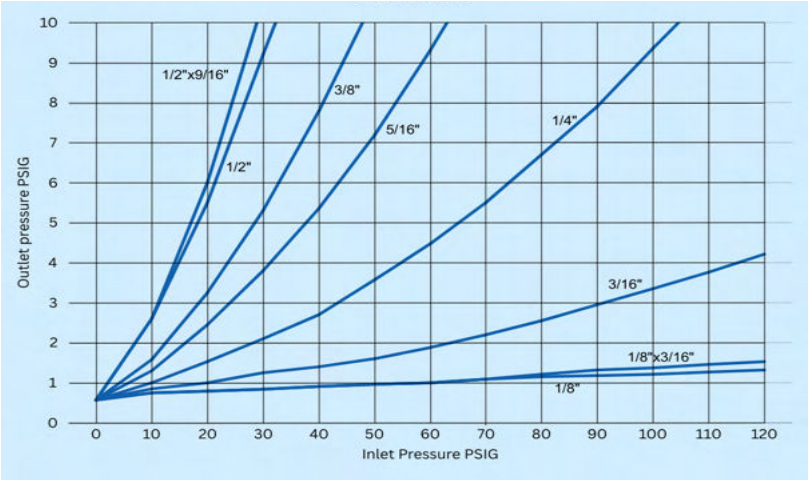

RELIEF CURVES

7" w.c. Set Point

Vent size	3/4″ NPT
Failure Type – Lever Disconnect	

All test results are reported at a base of 14.7 PSIA at 60° F and with 0.6 S.G. gas.

Regulator set at 7.0" w.c. for relief testing with 40 PSI inlet pressure @ 50 SCFH as per ANSI B109.4.

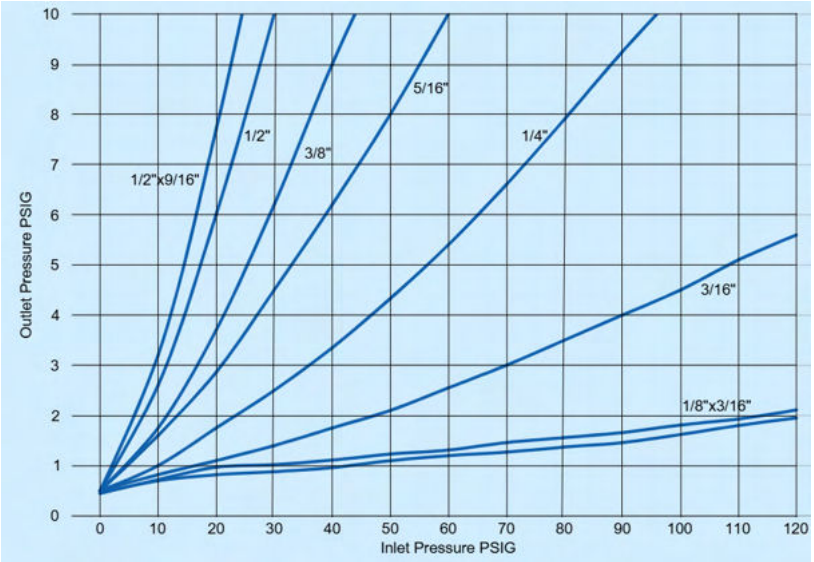

B42 SERIES RESIDENTIAL REGULATOR, MODELS N AND R

14" w.c. (34 mbar) Capacity Table (2" Droop*), 3/4" Outlet Valve Body

Typical Capacity Info.	
Model	B42 N, R
Inlet size	3/4" NPT
Outlet size	3/4" NPT
Spring color	Silver

Capacities in SCFH of 0.6 S.G. gas; base conditions of 14.7 PSIA and 60° F.

Inlet Pressure		Orifice Size							
PSIG	**BAR**	**1/8"**	**1/8 x 3/16"**	**3/16"**	**1/4"**	**5/16"**	**3/8"**	**1/2"**	**1/2 x 9/16"**
1	0.069	-	-	-	105 (3.0)	270 (7.6)	230 (6.5)	365 (10.3)	420 (11.9)
2	0.1	-	100 (2.8)	220 (6.2)	300 (8.5)	385 (10.9)	450 (12.7)	550 (15.6)	590 (16.7)
3	0.2	95 (2.7)	110 (3.1)	270 (7.6)	445 (12.6)	445 (12.6)	515 (14.6)	650 (18.4)	720 (20.4)
5	0.4	150 (4.2)	280 (7.9)	390 (11.0)	540 (15.3)	625 (17.7)	740 (21.0)	880 (24.9)	930 (26.3)
10	0.7	360 (10.2)	390 (11.0)	570 (16.1)	820 (23.2)	960 (27.2)	1100 (31.1)	1225	1270 (36.0)
15	1.0	460 (13.0)	500 (14.2)	780 (22.1)	1070 (30.3)	1250 (35.4)	1350 (38.2)		
20	1.4	560 (15.9)	590 (16.7)	1000 (28.3)	1320 (37.4)	1425 (40.4)	1575 (44.6)		
30	2.1	740 (21.0)	750 (21.2)	1320 (37.4)	1640 (46.4)	1750 (49.6)			
40	2.8	910 (25.8)	920 (26.1)	1600 (45.3)	1950 (55.2)				
50	3.5	1050 (29.7)	1100 (31.1)	1800 (51.1)	2080 (58.9)				
60	4.1	1230 (34.8)	1260 (35.7)	1950 (55.2)	2200 (62.3)				
80	5.5	1550 (43.9)	1550 (43.9)	2000 (56.6)					
100	6.9	1640 (46.4)	1880 (53.2)	2000 (56.6)					
125	8.6	2150 (60.9)	2150 (60.9)	2150 (60.9)					
Inlet Effect A (inches w.c.)		0.2	0.4	0.4	0.5	0.7	0.7	2.3	2.3
Lock Up B (inches w.c.)		0.6	0.6	0.7	0.8	0.9	1.0	1.3	1.3

Notes:

A. Change in outlet pressure for 10 PSIG inlet pressure change.
B. Outlet pressure increase required for lock up.

*Individual regulator performance may vary from data shown.

Complies with ANSI Z21.80/CSA 6.22 Class I

Do not operate orifice in shaded inlet pressure area.

B42 SERIES RESIDENTIAL REGULATOR, MODELS N AND R

14" w.c. (34 mbar) Capacity Table (2" Droop*) , 1" Outlet Valve Body

Typical Capacity Info.	
Model	B42 N, R
Inlet size	1" NPT
Outlet size	1" NPT
Spring color	Silver

Capacities in SCFH of 0.6 S.G. gas; base conditions of 14.7 PSIA and 60° F.

Inlet Pressure		**Orifice Size**							
PSIG	**BAR**	**1/8"**	**1/8 x 3/16"**	**3/16"**	**1/4"**	**5/16"**	**3/8"**	**1/2"**	**1/2 x 9/16"**
1	0.069	-	-	-	190 (5.4)	270 (7.7)	280 (7.9)	550 (15.6)	575 (16.3)
2	0.1	-	190 (5.4)	220 (6.2)	300 (8.5)	430 (12.2)	450 (12.7)	820 (23.2)	860 (24.4)
3	0.2	160 (4.5)	215 (6.1)	300 (8.5)	380 (10.8)	550 (15.6)	560 (15.9)	1030 (29.1)	1080 (30.6)
5	0.4	230 (6.5)	280 (7.9)	390 (11.0)	550 (15.6)	710 (20.1)	740 (21.0)	1230 (34.8)	1310 (37.1)
10	0.7	370 (10.5)	390 (11.0)	600 (17.0)	820 (23.2)	1050 (29.7)	1130 (32.0)	1650 (45.5)	1680 (47.6)
15	1.0	460 (13.0)	525 (14.9)	800 (22.7)	1070 (30.3)	1340 (37.9)	1460 (41.3)		
20	1.4	610 (17.3)	700 (19.8)	1000 (28.3)	1320 (37.4)	1630 (46.1)	1800 (51.0)		
30	2.1	800 (22.7)	890 (25.2)	1340 (37.9)	1750 (49.6)	1950 (55.2)			
40	2.8	1030 (29.1)	1150 (32.6)	1750 (49.6)	2050 (58.1)				
50	3.5	1200 (34.0)	1300 (36.8)	2010 (56.9)	2300 (65.1)				
60	4.1	1310 (37.1)	1425 (40.4)	2250 (63.7)	2500 (70.8)				
80	5.5	1900 (53.8)	2000 (56.6)	2580 (73.1)					
100	6.9	2200 (62.3)	2275 (64.4)	2700 (76.5)					
125	8.6	2200 (62.3)	2275 (64.4)	2900 (82.1)					
Inlet Effect A (inches w.c.)		0.12	0.12	0.22	0.33	0.50	0.71	2.3	2.3
Lock Up B (inches w.c.)		0.6	0.6	0.7	0.8	0.9	1.0	1.3	1.3

Notes:

A. Change in outlet pressure for 10 PSIG inlet pressure change.
B. Outlet pressure increase required for lock up.

*Individual regulator performance may vary from data shown.

Complies with ANSI Z21.80/CSA 6.22 Class I

Do not operate orifice in shaded inlet pressure area.

B42 SERIES RESIDENTIAL REGULATOR, MODELS N AND R

14" w.c. (34 mbar) Capacity Table (2" Droop*) , 1-1/4" Outlet Valve Body

Typical Capacity Info.

Model	B42 N, R
Inlet size	1-1/4" NPT
Outlet size	1-1/4" NPT
Spring color	Silver

Capacities in SCFH of 0.6 S.G. gas; base conditions of 14.7 PSIA and 60° F.

Inlet Pressure		**Orifice Size**							
PSIG	**BAR**	**1/8"**	**1/8 x 3/16"**	**3/16"**	**1/4"**	**5/16"**	**3/8"**	**1/2"**	**1/2 x 9/16"**
1	0.069	-	-	-	270 (7.6)	285 (8.1)	300 (8.5)	560 (15.8)	590 (16.7)
2	0.1	-	250 (7.1)	300 (8.5)	320 (9.1)	380 (10.8)	460 (13)	830 (23.5)	875 (24.8)
3	0.2	160 (4.5)	270 (7.6)	320 (9.1)	420 (11.9)	480 (13.6)	570 (16.1)	1040	1090 (30.8)
5	0.4	230 (6.5)	370 (10.5)	400 (11.3)	560 (15.8)	720 (20.3)	750 (21.2)	1400	1510 (42.7)
10	0.7	370 (10.5)	560 (15.8)	610 (17.3)	830 (23.5)	1100 (31.1)	1170 (33.1)	1670	1700 (48.1)
15	1.0	465 (13.1)	680 (19.2)	820 (23.2)	1120 (31.7)	1360 (38.5)	1630 (46.1)		
20	1.4	620 (17.5)	800 (22.7)	1010 (28.6)	1380 (39)	1670 (47.3)	2020 (57.2)		
30	2.1	810 (22.9)	1020 (28.8)	1480 (41.9)	2060 (58.3)	2300 (65.1)			
40	2.8	1040 (29.4)	1260 (35.6)	2080 (36.2)	2700 (76.5)				
50	3.5	1210 (34.2)	1470 (41.6)	2400 (67.9)	3100 (87.7)				
60	4.1	1320 (37.4)	1720 (48.7)	2740 (77.5)	3400 (96.2)				
80	5.5	1950 (55.2)	2170 (61.4)	3410 (96.5)					
100	6.9	2210 (62.5)	2540 (71.9)	4000 (113.2)					
125	8.6	2250 (63.7)	2600 (73.6)	4300 (121.7)					
Inlet Effect A (inches w.c.)		0.12	0.12	0.22	0.33	0.50	0.71	2.3	2.3
Lock Up B (inches w.c.)		0.6	0.6	0.7	0.8	0.9	1.0	1.3	1.3

Notes:

A. Change in outlet pressure for 10 PSIG inlet pressure change.
B. Outlet pressure increase required for lock up.

*Individual regulator performance may vary from data shown.

Complies with ANSI Z21.80/CSA 6.22 Class I

Do not operate orifice in shaded inlet pressure area.

B42 PERFORMANCE CURVES

14" w.c. Set Point

Model	B42 N, R
Inlet size	3/4" NPT
Outlet size	1" NPT
Orifice size	3/16"
Spring	Silver

All test results are reported at a base of 14.7 PSIA at 60° F and with 0.6 S.G. gas.

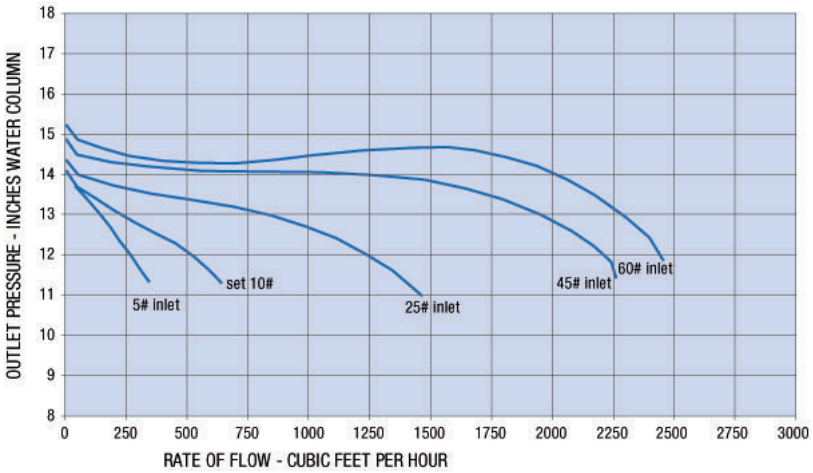

RELIEF CURVES

14" w.c. Set Point

Vent size	1" NPT
Failure Type – Lever Disconnect	

All test results are reported at a base of 14.7 PSIA at 60° F and with 0.6 S.G. gas.

Regulator set at 14.0" w.c. for relief testing with 10 PSIG @ 50 SCFH inlet pressure.

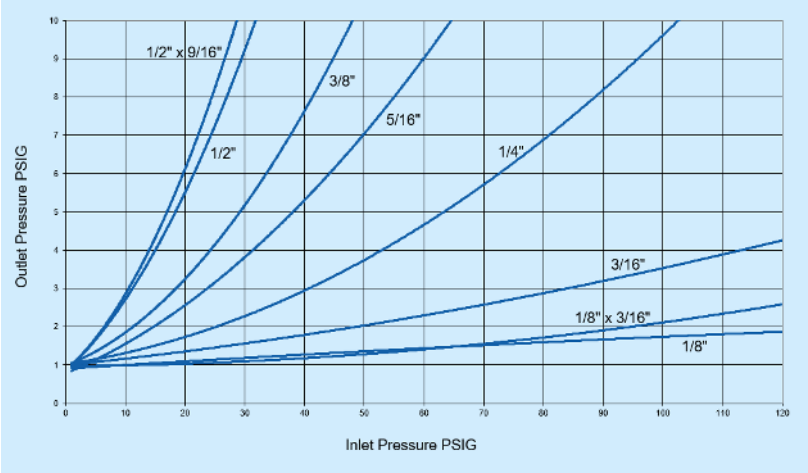

RELIEF CURVES

14" w.c. Set Point

Vent size	3/4" NPT
Failure Type – Lever Disconnect	

All test results are reported at a base of 14.7 PSIA at 60° F and with 0.6 S.G. gas.

Regulator set at 14.0" w.c. for relief testing with 10 PSIG @ 50 SCFH inlet pressure

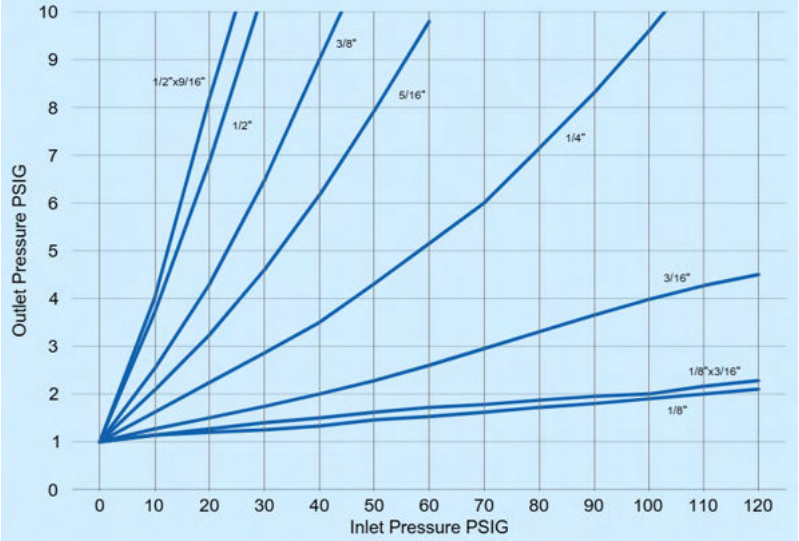

B42 SERIES RESIDENTIAL REGULATOR, MODELS N AND R

1 PSIG (69 mbar) Capacity Table (1% Absolute Droop*), 3/4" Outlet Valve Body

Typical Capacity Info.

Model	B42 N, R
Inlet size	3/4" NPT
Outlet size	3/4" NPT
Spring color	Silver

Capacities in SCFH (m3/hr) of 0.6 S.G. gas; base conditions of 14.7 PSIA and 60° F.

Inlet Pressure		**Orifice Size**							
PSIG	**BAR**	**1/8"**	**1/8x3/16"**	**3/16"**	**1/4"**	**5/16"**	**3/8"**	**1/2"**	**1/2x9/16"**
2	0.1	89 (2.5)	115 (3.3)	230 (6.5)	300 (8.5)	330 (9.3)	420 (11.9)	455 (12.9)	475 (13.5)
3	0.2	115 (3.3)	160 (4.5)	280 (7.9)	350 (9.9)	410 (11.6)	540 (15.3)	615 (17.4)	670 (19.0)
5	0.4	230 (6.5)	275 (7.8)	340 (9.6)	490 (13.9)	580 (16.4)	700 (19.8)	790 (22.4)	975 (27.6)
10	0.7	365 (9.5)	410 (11.6)	520 (14.7)	770 (21.8)	870 (24.6)	1130 (32.0)	1145 (32.4)	1330 (37.7)
15	1.0	440 (12.5)	510 (14.4)	730 (20.7)	1050 (29.7)	1190 (33.7)	1390 (39.4)		
20	1.4	535 (15.1)	590 (16.7)	890 (25.2)	1290 (36.5)	1400 (39.6)	1620 (45.9)		
30	2.1	715 (20.2)	760 (21.5)	1150 (32.6)	1630 (46.2)	1740 (49.3)			
40	2.8	910 (25.8)	930 (26.3)	1525 (43.2)	1900 (53.8)				
50	3.5	1080 (30.6)	1100 (31.1)	1740 (49.3)	2140 (60.6)				
60	4.1	1235 (35.0)	1260 (35.7)	1910 (54.1)	2250 (63.7)				
80	5.5	1550 (43.9)	1580 (44.7)	2100 (59.5)					
100	6.9	1660 (47)	1850 (52.4)	2150 (60.9)					
125	8.6	1760 (49.8)	1950 (55.2)	2160 (61.2)					
Inlet Effect A (PSIG)		0.03	0.03	0.03	0.03	0.04	0.04	0.05	0.05
Lock Up B (PSIG)		0.05	0.05	0.07	0.08	0.09	0.11	0.13	0.13

Notes:

A. Change in outlet pressure for 10 PSIG inlet pressure change.
B. Outlet pressure increase required for lock up.

*Individual regulator performance may vary from data shown.

Do not operate orifice in shaded inlet pressure area.

B42 SERIES RESIDENTIAL REGULATOR, MODELS N AND R

1 PSIG (69 mbar) Capacity Table (2% Absolute Droop*), 3/4" Outlet Valve Body

Typical Capacity Info.

Model	B42 R
Inlet size	3/4" NPT
Outlet size	3/4" NPT
Spring color	Silver

Capacities in SCFH (m3/hr) of 0.6 S.G. gas; base conditions of 14.7 PSIA and 60° F.

Inlet Pressure		**Orifice Size**							
PSIG	**BAR**	**1/8"**	**1/8 x 3/16"**	**3/16"**	**1/4"**	**5/16"**	**3/8"**	**1/2"**	**1/2 x 9/16"**
2	0.1	100 (2.8)	130 (3.7)	250 (7.1)	460 (13.0)	550 (15.6)	670 (19.8)	790 (19.0)	850 (24.1)
3	0.2	170 (4.8)	225 (6.4)	390 (11.0)	570 (16.1)	690 (19.5)	850 (24.1)	1030 (29.2)	1120 (31.7)
5	0.4	260 (7.4)	315 (8.9)	520 (14.7)	760 (21.5)	950 (26.9)	1120 (31.7)	1265 (35.8)	1440 (40.8)
10	0.7	380 (10.8)	420 (11.9)	760 (21.5)	1200 (34.0)	1350 (38.2)	1600 (45.3)	1790 (50.7)	1830 (51.8)
15	1.0	490 (13.9)	510 (14.4)	1030 (29.2)	1490 (42.2)	1700 (48.1)	1890 (53.5)		
20	1.4	575 (16.3)	600 (17.0)	1250 (35.4)	1750 (49.6)	1930 (54.7)	2110 (59.7)		
30	2.1	735 (20.8)	760 (21.5)	1600 (45.3)	2100 (59.5)	2300 (65.1)			
40	2.8	910 (25.8)	930 (26.3)	1935 (54.8)	2400 (68.0)				
50	3.5	1075 (30.4)	1100 (31.1)	2205 (62.4)	2680 (75.9)				
60	4.1	1235 (35.0)	1260 (35.7)	2430 (68.8)	2830 (80.1)				
80	5.5	1555 (44.0)	1595 (45.2)	2700 (76.5)					
100	6.9	1880 (53.2)	1925 (54.5)	2700 (76.5)					
125	8.6	2100 (59.5)	2260 (64.0)	2700 (76.5)					
Inlet Effect A (PSIG)		0.03	0.03	0.03	0.03	0.04	0.04	0.05	0.05
Lock Up B (PSIG)		0.05	0.05	0.07	0.08	0.09	0.11	0.13	0.13

Notes:

A. Change in outlet pressure for 10 PSIG inlet pressure change.
B. Outlet pressure increase required for lock up.

*Individual regulator performance may vary from data shown.

Do not operate orifice in shaded inlet pressure area.

B42 SERIES RESIDENTIAL REGULATOR, MODELS N AND R

1 PSIG (69 mbar) Capacity Table (1% Absolute Droop*), 1" Outlet Valve Body

Capacities in SCFH (m3/hr) of 0.6 S.G. gas; base conditions of 14.7 PSIA and 60° F.

Typical Capacity Info.

Model	B42 R
Inlet size	3/4" NPT
Outlet size	1" NPT
Spring color	Silver

Inlet Pressure		**Orifice Size**							
PSIG	**BAR**	**1/8"**	**1/8 x 3/16"**	**3/16"**	**1/4"**	**5/16"**	**3/8"**	**1/2"**	**1/2 x 9/16"**
2	0.1	-	-	230 (6.5)	300 (8.5)	330 (9.3)	420 (11.9)	455 (12.9)	475 (13.5)
3	0.2	160 (4.5)	225 (6.4)	300 (8.5)	400 (11.3)	450 (12.7)	540 (15.3)	615 (17.4)	670 (19.0)
5	0.3	230 (6.5)	300 (8.5)	385 (10.9)	490 (13.9)	650 (18.4)	700 (19.8)	790 (22.4)	1035 (29.3)
10	0.7	365 (10.3)	425 (10.9)	570 (16.1)	770 (21.8)	1020 (28.9)	1130 (32.0)	1145 (32.4)	1575 (44.6)
15	1.0	460 (13.0)	550 (16.1)	770 (21.8)	1050 (29.7)	1270 (36.0)	1410 (39.9)		
20	1.4	570 (16.1)	675 (21.8)	980 (27.8)	1350 (38.2)	1550 (43.9)	1710 (48.4)		
30	2.1	780 (22.1)	875 (27.8)	1330 (37.7)	1850 (52.4)	2000 (56.6)			
40	2.8	980 (27.8)	1100 (31.2)	1760 (49.8)	2250 (63.7)				
50	3.5	1150 (32.6)	1225 (34.7)	2000 (56.6)	2600 (73.6)				
60	4.1	1270 (36.0)	1350 (38.2)	2400 (68.0)	2850 (80.7)				
80	5.5	1700 (48.1)	1900 (53.8)	2890 (81.8)					
100	6.9	1900 (53.8)	2150 (60.9)	3150 (89.2)					
125	8.6	2100 (59.5)	2275 (64.4)	3300 (93.5)					

Inlet Effect A (PSIG)	0.01	0.01	0.01	0.02	0.03	0.04	0.05	0.05
Lock Up B (PSIG)	0.05	0.05	0.07	0.08	0.09	0.11	0.13	0.13

Notes:

A. Change in outlet pressure for 10 PSIG inlet pressure change.
B. Outlet pressure increase required for lock up.

*Individual regulator performance may vary from data shown.

Do not operate orifice in shaded inlet pressure area.

B42 SERIES RESIDENTIAL REGULATOR, MODELS N AND R

1 PSIG (69 mbar) Capacity Table (2% Absolute Droop*), 1" Outlet Valve Body

Capacities in SCFH (m3/hr) of 0.6 S.G. gas; base conditions of 14.7 PSIA and 60° F.

Typical Capacity Info.	
Model	B42 R
Inlet size	3/4" NPT
Outlet size	1" NPT
Spring color	Silver

Inlet Pressure		**Orifice Size**							
PSIG	**BAR**	**1/8"**	**1/8 x 3/16"**	**3/16"**	**1/4"**	**5/16"**	**3/8"**	**1/2"**	**1/2 x 9/16"**
2	0.14	-	-	250 (7.1)	480 (13.6)	610 (17.3)	700 (19.8)	790 (22.4)	850 (24.1)
3	0.21	170 (4.8)	225 (6.4)	400 (11.3)	620 (17.6)	880 (24.9)	980 (27.8)	1070 (30.0)	1120 (31.7)
5	0.34	260 (7.4)	325 (9.2)	570 (16.1)	810 (22.9)	1060 (30.0)	1200 (34.0)	1265 (35.8)	1600 (45.3)
10	0.69	410 (11.6)	500 (14.2)	840 (23.8)	1270 (36.0)	1600 (45.3)	1850 (52.4)	2020 (57.2)	2220 (62.9)
15	1.03	510 (14.4)	600 (17.0)	1050 (29.7)	1600 (45.3)	2000 (56.6)	2175 (61.6)		
20	1.38	610 (17.3)	750 (21.2)	1260 (35.7)	2020 (57.2)	2400 (68.0)	2500 (70.8)		
30	2.07	780 (22.1)	875 (24.8)	1630 (46.2)	2600 (73.6)	2900 (82.1)			
40	2.76	980 (27.8)	1100 (31.2)	2000 (56.6)	3000 (85.0)				
50	3.45	1150 (32.6)	1200 (33.9)	2410 (68.2)	3300 (93.5)				
60	4.14	1270 (36.0)	1350 (38.2)	2750 (77.9)	3450 (97.7)				
80	5.52	1700 (48.1)	1900 (53.8)	3410 (96.6)					
100	6.89	1900 (53.8)	2150 (60.9)	3600 (101.9)					
125	8.62	2100 (59.5)	2275 (64.4)	3800 (107.6)					
Inlet Effect A (PSIG)		0.01	0.01	0.01	0.02	0.03	0.04	0.05	0.05
Lock Up B (PSIG)		0.05	0.05	0.07	0.08	0.09	0.11	0.13	0.13

Notes:

A. Change in outlet pressure for 10 PSIG inlet pressure change.
B. Outlet pressure increase required for lock up.

*Individual regulator performance may vary from data shown.

Do not operate orifice in shaded inlet pressure area.

B42 SERIES RESIDENTIAL REGULATOR, MODELS N AND R

1 PSIG (69 mbar) Capacity Table (1% Absolute Droop*), 1-1/4" Outlet Valve Body

Capacities in SCFH (m3/hr) of 0.6 S.G. gas; base conditions of 14.7 PSIA and 60° F.

Typical Capacity Info.	
Model	B42 R
Inlet size	1-1/4" NPT
Outlet size	1-1/4" NPT
Spring color	Silver

Inlet Pressure		**Orifice Size**							
PSIG	**BAR**	**1/8"**	**1/8 x 3/16"**	**3/16"**	**1/4"**	**5/16"**	**3/8"**	**1/2"**	**1/2 x 9/16"**
2	0.14	-	-	280 (7.9)	320 (9)	330 (9.3)	425 (12)	510 (14.4)	580 (16.4)
3	0.21	160 (4.5)	225 (6.4)	310 (8.7)	400 (11.3)	455 (12.8)	550 (15.5)	650 (18.4)	690 (19.5)
5	0.34	270 (7.6)	300 (8.5)	395 (11.1)	500 (14.1)	660 (18.6)	715 (20.2)	800 (22.6)	1045 (29.5)
10	0.69	365 (10.3)	425 (10.9)	580 (16.4)	780 (22.1)	1030 (29.1)	1140 (32.2)	1270 (36)	1600 (45.3)
15	1.03	465 (13.1)	560 (15.8)	775 (21.9)	1060 (30)	1275 (36.1)	1425 (40.3)		
20	1.38	570 (16.1)	680 (19.2)	1000 (28.3)	1360 (38.5)	1575 (44.5)	1725 (48.8)		
30	2.07	785 (22.2)	890 (25.2)	1350 (38.2)	1875 (53)	2030 (57.4)			
40	2.76	985 (27.8)	1120 (31.7)	1775 (50.2)	2270 (64.2)				
50	3.45	1155 (32.7)	1250 (35.3)	2100 (59.9)	2625 (74.3)				
60	4.14	1280 (36.2)	1370 (38.7)	2570 (72.7)	2875 (81.4)				
80	5.52	1710 (48.4)	2000 (56.6)	3380 (95.7)					
100	6.89	1925 (54.5)	2200 (62.2)	3400 (96.2)					
125	8.62	2200 (62.2)	2280 (64.5)	3600 (101.9)					
Inlet Effect A (PSIG)		0.01	0.01	0.01	0.02	0.03	0.04	0.05	0.05
Lock Up B (PSIG)		0.05	0.05	0.07	0.08	0.09	0.11	0.13	0.13

Notes:

A. Change in outlet pressure for 10 PSIG inlet pressure change.
B. Outlet pressure increase required for lock up.

*Individual regulator performance may vary from data shown.

Do not operate orifice in shaded inlet pressure area.

B42 SERIES RESIDENTIAL REGULATOR, MODELS N AND R

1 PSIG (69 mbar) Capacity Table (2% Absolute Droop*), 1-1\4" Outlet Valve Body

Typical Capacity Info.

Model	B42 R
Inlet size	1-1/4" NPT
Outlet size	1-1/4" NPT
Spring color	Silver

Capacities in SCFH (m3/hr) of 0.6 S.G. gas; base conditions of 14.7 PSIA and 60° F.

Inlet Pressure		Orifice Size							
PSIG	**BAR**	**1/8"**	**1/8 x 3/16"**	**3/16"**	**1/4"**	**5/16"**	**3/8"**	**1/2"**	**1/2 x 9/16"**
2	0.14	-	-	320 (9)	485 (13.7)	625 (17.6)	725 (20.5)	890 (25.2)	1000 (28.3)
3	0.21	210 (5.9)	250 (7.1)	410 (11.6)	580 (16.4)	890 (25.2)	990 (28)	1100 (31.1)	1240 (35.1)
5	0.34	280 (7.9)	330 (9.3)	590 (16.7)	830 (23.5)	1075 (30.4)	1240 (35.1)	1400 (39.6)	1625 (46)
10	0.69	420 (11.8)	525 (14.8)	855 (24.2)	1290 (36.5)	1650 (46.7)	1890 (53.5)	2080 (58.9)	2300 (65.1)
15	1.03	510 (14.4)	620 (17.5)	1075 (30.4)	1650 (46.7)	2100 (59.5)	2280 (64.5)		
20	1.38	620 (17.5)	775 (21.9)	1270 (35.9)	2075 (58.7)	2450 (69.3)	2800 (79.2)		
30	2.07	785 (22.2)	900 (25.4)	1660 (47)	2650 (75)	3000 (84.9)			
40	2.76	990 (28)	1130 (31.9)	2020 (57.2)	3100 (87.7)				
50	3.45	1175 (33.2)	1225 (34.6)	2450 (69.3)	3400 (96.2)				
60	4.14	1275 (36.1)	1375 (38.9)	2800 (79.2)	3500 (99.1)				
80	5.52	1710 (48.4)	2100 (59.5)	3550 (100.5)					
100	6.89	1910 (54)	2200 (62.2)	4100 (116)					
125	8.62	2150 (60.8)	2400 (67.9)	4300 (121.7)					
Inlet Effect A (PSIG)		0.01	0.01	0.01	0.02	0.03	0.04	0.05	0.05
Lock Up B (PSIG)		0.05	0.05	0.07	0.08	0.09	0.11	0.13	0.13

Notes:

A. Change in outlet pressure for 10 PSIG inlet pressure change.
B. Outlet pressure increase required for lock up.

*Individual regulator performance may vary from data shown.

Do not operate orifice in shaded inlet pressure area.

B42 PERFORMANCE CURVES

1 PSIG Set Point

Model	B42 R
Inlet size	3/4" NPT
Outlet size	1" NPT
Spring	Silver

All test results are reported at a base of 14.7 PSIA at 60º F and with 0.6 S.G. gas.

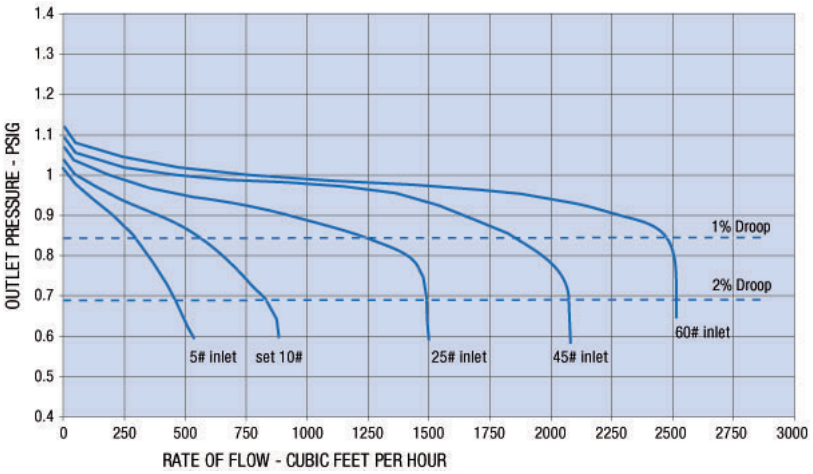

RELIEF CURVES

1 PSIG Set Point

Vent Size	1" NPT
Failure Type – Lever Disconnect	

All test results are reported at a base of 14.7 PSIA at 60º F and with 0.6 S.G. gas.

Regulator set at 1 PSIG for relief testing with 10 PSIG @ 50 SCFH inlet pressure

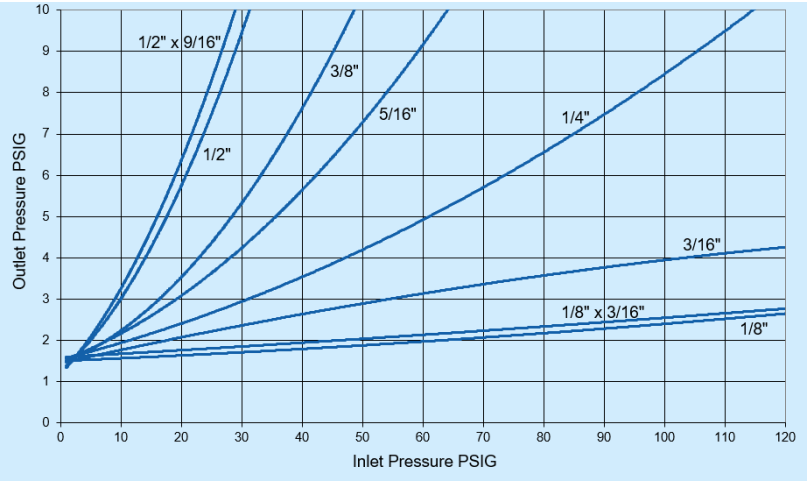

RELIEF CURVES

1 PSIG Set Point

Vent size	3/4" NPT
Failure Type – Lever Disconnect	

All test results are reported at a base of 14.7 PSIA at 60º F and with 0.6 S.G. gas.

Regulator set at 1 PSIG for relief testing with 10 PSIG @ 50 SCFH inlet pressure.

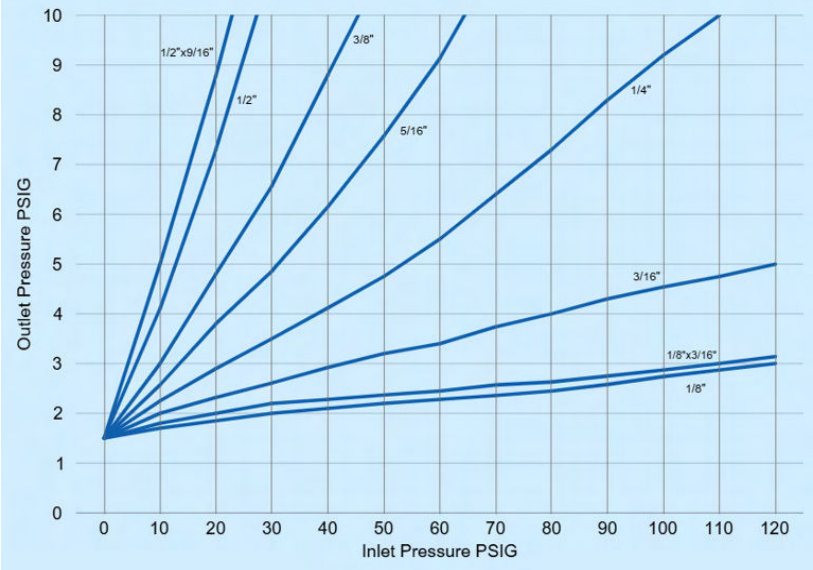

B42 SERIES RESIDENTIAL REGULATOR, MODELS N AND R

2 PSIG (0.14 mbar) Capacity Table (1% Absolute Droop*), 3/4" Outlet Valve Body

Typical Capacity Info.

Maodel	B42 R
Inlet size	3/4" NPT
Outlet size	3/4" NPT
Spring color	Yellow/black

Capacities in SCFH (m3/hr) of 0.6 S.G. gas; base conditions of 14.7 PSIA and 60° F.

Inlet Pressure		**Orifice Size**							
PSIG	**BAR**	**1/8"**	**1/8 x 3/16"**	**3/16"**	**1/4"**	**5/16"**	**3/8"**	**1/2"**	**1/2 x 9/16"**
3	0.21	75 (2.1)	105 (3.0)	105 (3.0)	200 (5.7)	230 (6.5)	280 (7.9)	320 (9.1)	340 (9.6)
5	0.34	135 (3.8)	170 (4.8)	220 (6.2)	290 (8.2)	370 (10.3)	420 (11.9)	480 (13.6)	575 (16.3)
10	0.69	230 (6.5)	295 (8.4)	370 (10.5)	490 (13.9)	730 (20.7)	750 (21.2)	840 (23.8)	1075 (30.4)
15	1.03	300 (8.5)	415 (11.8)	490 (13.9)	650 (18.4)	1000 (28.3)	1000 (28.3)		
20	1.38	370 (10.5)	540 (15.3)	600 (17.0)	840 (23.8)	1200 (34.0)	1200 (34.0)		
30	2.07	500 (14.2)	700 (19.8)	860 (24.4)	1230 (34.8)	1600 (45.3)			
40	2.76	600 (17.0)	880 (25.0)	1100 (31.2)	1575 (44.6)				
50	3.45	800 (22.7)	1075 (30.4)	1400 (39.6)	1900 (53.8)				
60	4.14	950 (27.0)	1250 (35.4)	1600 (45.3)	2120 (60.0)				
80	5.52	1200 (34.0)	1530 (43.3)	1900 (53.8)					
100	6.89	1600 (45.3)	1675 (47.4)	1900 (53.8)					
125	8.62	1750 (49.5)	1900 (53.8)	2100 (59.5)					
Inlet Effect A (PSIG)		0.01	0.01	0.02	0.03	0.03	0.04	0.06	0.06
Lock Up B (PSIG)		0.06	0.06	0.08	0.09	0.10	0.12	0.14	0.14

Notes:

A. Change in outlet pressure for 10 PSIG inlet pressure change.
B. Outlet pressure increase required for lock up.

*Individual regulator performance may vary from data shown.

Do not operate orifice in shaded inlet pressure area.

B42 SERIES RESIDENTIAL REGULATOR, MODELS N AND R

2 PSIG (0.14 mbar) Capacity Table (2% Absolute Droop*), 3/4" Outlet Valve Body

Typical Capacity Info.	
Model	B42 R
Inlet size	3/4" NPT
Outlet size	3/4" NPT
Spring color	Yellow/black

Capacities in SCFH (m3/hr) of 0.6 S.G. gas; base conditions of 14.7 PSIA and 60° F.

Inlet Pressure		Orifice Size							
PSIG	**BAR**	**1/8"**	**1/8 x 3/16"**	**3/16"**	**1/4"**	**5/16"**	**3/8"**	**1/2"**	**1/2 x 9/16"**
3	0.21	100 (2.8)	125 (3.5)	240 (6.8)	320 (9.1)	440 (12.5)	490 (13.9)	560 (15.9)	645 (18.3)
5	0.34	175 (5.0)	255 (7.2)	340 (9.6)	460 (13.0)	650 (18.4)	730 (20.7)	925 (26.2)	1085 (30.7)
10	0.69	320 (9.1)	410 (11.6)	600 (17.0)	850 (24.1)	1085 (30.7)	1280 (36.3)	1485 (42.1)	1600 (45.3)
15	1.03	440 (12.5)	500 (14.2)	840 (23.8)	1150 (32.6)	1410 (39.9)	1600 (45.3)		
20	1.38	530 (15.0)	580 (16.4)	1040 (29.5)	1420 (40.2)	1580 (44.7)	1870 (53.0)		
30	2.07	710 (20.1)	750 (21.8)	1375 (38.9)	1810 (51.3)	2050 (58.0)			
40	2.76	875 (24.8)	930 (26.3)	1690 (47.9)	2180 (61.7)				
50	3.45	1050 (29.7)	1100 (31.1)	2020 (57.2)	2500 (70.8)				
60	4.14	1200 (34.0)	1260 (35.7)	2200 (62.3)	2750 (77.9)				
80	5.52	1500 (42.5)	1595 (45.2)	2540 (71.9)					
100	6.89	1850 (52.4)	1905 (53.9)	2720 (77.0)					
125	8.62	2100 (59.5)	2250 (63.7)	2720 (77.0)					
Inlet Effect A (PSIG)		0.01	0.02	0.03	0.03	0.04	0.04	0.06	0.06
Lock Up B (PSIG)		0.06	0.06	0.08	0.09	0.10	0.12	0.14	0.14

Notes:

A. Change in outlet pressure for 10 PSIG inlet pressure change.
B. Outlet pressure increase required for lock up.

*Individual regulator performance may vary from data shown.

Do not operate orifice in shaded inlet pressure area.

B42 SERIES RESIDENTIAL REGULATOR, MODELS N AND R

2 PSIG (0.14 mbar) Capacity Table (1% Absolute Droop*), 1" Outlet Valve Body

Capacities in SCFH (m3/hr) of 0.6 S.G. gas; base conditions of 14.7 PSIA and 60° F.

Typical Capacity Info.

Model	B42 R
Inlet size	1" NPT
Outlet size	1" NPT
Spring color	Yellow/black

Inlet Pressure		**Orifice Size**							
PSIG	**BAR**	**1/8"**	**1/8 x 3/16"**	**3/16"**	**1/4"**	**5/16"**	**3/8"**	**1/2"**	**1/2 x 9/16"**
3	0.21	100 (2.8)	120 (3.4)	160 (4.5)	200 (5.7)	230 (6.5)	280 (7.9)	320 (9.1)	340 (9.6)
5	0.34	135 (3.8)	170 (4.8)	230 (6.5)	290 (8.2)	400 (11.3)	420 (11.9)	480 (13.6)	575 (16.3)
10	0.69	230 (6.5)	295 (8.4)	370 (10.5)	490 (13.9)	730 (20.7)	750 (21.2)	840 (23.8)	1075 (30.4)
15	1.03	300 (8.5)	415 (11.8)	500 (14.2)	650 (18.4)	1000 (28.3)	1000 (28.3)		
20	1.38	370 (10.5)	550 (15.6)	600 (17.0)	840 (23.8)	1200 (34.0)	1200 (34.0)		
30	2.07	500 (14.2)	700 (19.8)	900 (25.5)	1230 (34.8)	1600 (45.3)			
40	2.76	600 (17.0)	880 (25.0)	1100 (31.2)	1600 (45.3)				
50	3.45	800 (22.7)	1090 (30.9)	1400 (39.6)	1940 (54.9)				
60	4.14	950 (27.0)	1250 (35.4)	1600 (45.3)	2240 (63.4)				
80	5.52	1200 (34.0)	1730 (49.0)	2000 (56.6)					
100	6.89	1600 (45.3)	1900 (53.8)	2400 (68.0)					
125	8.62	2100 (59.5)	2500 (70.8)	3300 (93.5)					
Inlet Effect A (PSIG)		0.01	0.01	0.02	0.03	0.03	0.04	0.06	0.06
Lock Up B (PSIG)		0.06	0.06	0.08	0.09	0.10	0.12	0.14	0.14

Notes:

A. Change in outlet pressure for 10 PSIG inlet pressure change.
B. Outlet pressure increase required for lock up.

*Individual regulator performance may vary from data shown.

Do not operate orifice in shaded inlet pressure area.

B42 SERIES RESIDENTIAL REGULATOR, MODELS N AND R

2 PSIG (0.14 mbar) Capacity Table (2% Absolute Droop*), 1" Outlet Valve Body

Capacities in SCFH (m3/hr) of 0.6 S.G. gas; base conditions of 14.7 PSIA and 60° F.

Typical Capacity Info.

Model	B42 R
Inlet size	1" NPT
Outlet size	1" NPT
Spring color	Yellow/black

Inlet Pressure		**Orifice Size**							
PSIG	**BAR**	**1/8"**	**1/8 x 3/16"**	**3/16"**	**1/4"**	**5/16"**	**3/8"**	**1/2"**	**1/2 x 9/16"**
3	0.21	130 (3.7)	150 (4.3)	240 (6.8)	320 (9.1)	450 (12.7)	490 (13.9)	560 (15.9)	645 (18.3)
5	0.34	180 (5.1)	255 (7.2)	340 (9.6)	460 (13.0)	680 (19.3)	730 (20.7)	925 (26.2)	1085 (30.7)
10	0.69	320 (9.1)	420 (11.9)	600 (17.0)	850 (24.1)	1240 (35.1)	1280 (36.3)	1540 (43.6)	1710 (48.4)
15	1.03	440 (12.5)	530 (15.0)	850 (24.1)	1150 (32.6)	1600 (45.3)	1600 (45.3)		
20	1.38	530 (15.0)	590 (16.7)	1040 (29.5)	1420 (40.2)	2000 (56.6)	2000 (56.6)		
30	2.07	710 (20.1)	770 (21.8)	1430 (40.5)	1920 (54.4)	2400 (68.0)			
40	2.76	875 (24.8)	930 (26.3)	1700 (48.1)	2390 (67.7)				
50	3.45	1050 (29.7)	1140 (32.3)	2100 (59.5)	2800 (70.8)				
60	4.14	1200 (34.0)	1300 (36.8)	2400 (68.0)	3130 (88.6)				
80	5.52	1500 (42.5)	1825 (51.7)	2700 (76.5)					
100	6.89	1850 (52.4)	1950 (55.2)	3000 (85.0)					
125	8.62	2100 (59.5)	2600 (73.6)	3500 (99.1)					
Inlet Effect A (PSIG)		0.01	0.02	0.03	0.03	0.04	0.04	0.06	0.06
Lock Up B (PSIG)		0.06	0.06	0.08	0.09	0.10	0.12	0.14	0.14

Notes:

A. Change in outlet pressure for 10 PSIG inlet pressure change.
B. Outlet pressure increase required for lock up.

*Individual regulator performance may vary from data shown.

Do not operate orifice in shaded inlet pressure area.

B42 SERIES RESIDENTIAL REGULATOR, MODELS N AND R

2 PSIG (0.14 mbar) Capacity Table (1% Absolute Droop*), 1-1/4" Outlet Valve Body

Typical Capacity Info.

Model	B42 R
Inlet size	1-1/4" NPT
Outlet size	1-1/4" NPT
Spring color	Yellow/black

Capacities in SCFH (m3/hr) of 0.6 S.G. gas; base conditions of 14.7 PSIA and 60° F.

Inlet Pressure		**Orifice Size**							
PSIG	**BAR**	**1/8"**	**1/8 x 3/16"**	**3/16"**	**1/4"**	**5/16"**	**3/8"**	**1/2"**	**1/2x9/16"**
3	0.21	100 (2.8)	125 (3.5)	165 (4.6)	220 (6.2)	260 (7.3)	280 (7.9)	370 (10.4)	400 (11.3)
5	0.34	135 (3.8)	230 (6.5)	260 (7.3)	350 (9.9)	410 (11.6)	430 (12.1)	510 (14.4)	580 (16.4)
10	0.69	250 (7)	390 (11)	400 (11.3)	570 (16.1)	740 (20.9)	760 (21.5)	860 (24.3)	1100 (31.1)
15	1.03	370 (10.4)	510 (14.4)	525 (14.8)	670 (18.9)	1050 (29.7)	1100 (31.1)		
20	1.38	430 (12.1)	580 (16.4)	620 (17.5)	850 (24)	1275 (36.1)	1300 (36.8)		
30	2.07	530 (15)	720 (20.3)	920 (26)	1250 (35.3)	1700 (48.1)			
40	2.76	660 (18.6)	900 (25.4)	1150 (32.5)	1650 (46.7)				
50	3.45	810 (22.9)	1100 (31.1)	1425 (40.3)	2000 (56.6)				
60	4.14	950 (27.0)	1320 (37.3)	1650 (46.7)	2290 (64.8)				
80	5.52	1290 (36.5)	1750 (49.5)	2100 (59.5)					
100	6.89	1700 (48.1)	1950 (55.2)	2475 (70)					
125	8.62	2150 (60.8)	2600 (73.6)	3400 (96.2)					

Inlet Effect A (PSIG)	0.01	0.02	0.03	0.03	0.04	0.04	0.06	0.06
Lock Up B (PSIG)	0.06	0.06	0.08	0.09	0.10	0.12	0.14	0.14

Notes:

A. Change in outlet pressure for 10 PSIG inlet pressure change.
B. Outlet pressure increase required for lock up.

*Individual regulator performance may vary from data shown.

Do not operate orifice in shaded inlet pressure area.

B42 SERIES RESIDENTIAL REGULATOR, MODELS N AND R

2 PSIG (0.14 mbar) Capacity Table (2% Absolute Droop*), 1-1/4" Outlet Valve Body

Typical Capacity Info.

Model	B42 R
Inlet size	1-1/4" NPT
Outlet size	1-1/4" NPT
Spring color	Yellow/black

Capacities in SCFH (m3/hr) of 0.6 S.G. gas; base conditions of 14.7 PSIA and 60° F.

Inlet Pressure		**Orifice Size**							
PSIG	**BAR**	**1/8"**	**1/8 x 3/16"**	**3/16"**	**1/4"**	**5/16"**	**3/8"**	**1/2"**	**1/2 x 9/16"**
3	0.21	130 (3.7)	200 (5.6)	320 (9)	380 (10.7)	470 (13.3)	570 (16.1)	700 (19.8)	720 (20.3)
5	0.34	180 (5.1)	280 (7.9)	420 (11.9)	580 (16.4)	700 (19.8)	770 (21.8)	1020 (28.8)	1100 (31.1)
10	0.69	350 (9.9)	420 (11.9)	630 (17.8)	930 (26.3)	1260 (35.6)	1300 (36.8)	1590 (45)	1750 (49.5)
15	1.03	480 (13.6)	535 (15.1)	875 (24.7)	1200 (33.9)	1675 (47.4)	1700 (48.1)		
20	1.38	570 (16.1)	610 (17.2)	1070 (30.3)	1470 (41.6)	2100 (59.4)	2200 (62.3)		
30	2.07	730 (20.6)	800 (22.6)	1460 (41.3)	1980 (56.1)	2500 (70.8)			
40	2.76	910 (25.8)	960 (27.2)	1850 (52.4)	2525 (71.5)				
50	3.45	1060 (30)	1150 (32.6)	2200 (62.3)	2900 (82.1)				
60	4.14	1240 (35.1)	1320 (37.4)	2600 (73.6)	3200 (90.6)				
80	5.52	1580 (44.7)	1875 (53.1)	3350 (94.9)					
100	6.89	1890 (53.5)	2000 (56.6)	3500 (99.1)					
125	8.62	2230 (63.1)	2675 (75.7)	3650 (103.4)					
Inlet Effect A (PSIG)		0.01	0.02	0.03	0.03	0.04	0.04	0.06	0.06
Lock Up B (PSIG)		0.06	0.06	0.08	0.09	0.10	0.12	0.14	0.14

Notes:

A. Change in outlet pressure for 10 PSIG inlet pressure change.
B. Outlet pressure increase required for lock up.

*Individual regulator performance may vary from data shown.

Do not operate orifice in shaded inlet pressure area.

B42 PERFORMANCE CURVES

Model	B42 N, R
Inlet size	3/4" NPT
Outlet size	1" NPT
Spring	Yellow/black

All test results are reported at a base of 14.7 PSIA at 60º F and with 0.6 S.G. gas.

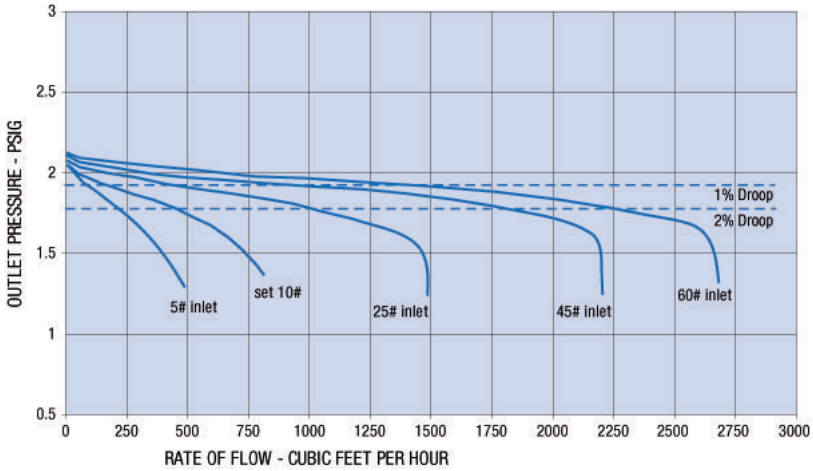

RELIEF CURVES

2 PSIG Set Point

Vent size	1" NPT
Failure Type – Lever Disconnect	

All test results are reported at a base of 14.7 PSIA at 60º F and with 0.6 S.G. gas.

Regulator set at 2 PSIG for relief testing with 10 PSIG @ 50 SCFH inlet pressure.

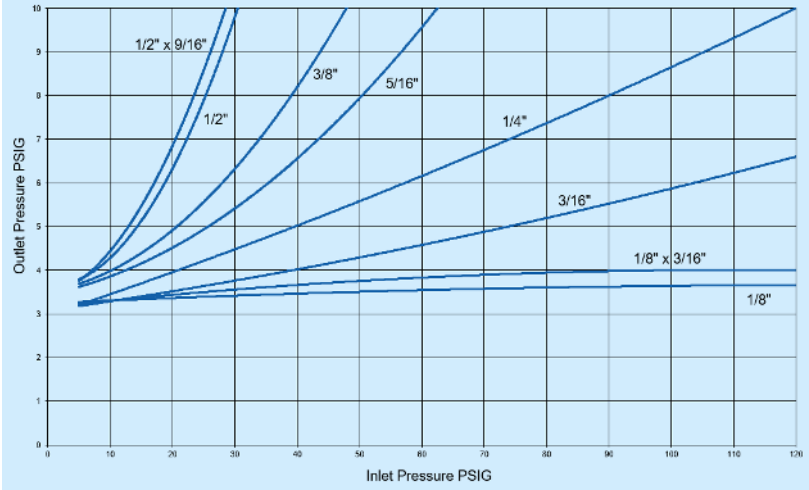

RELIEF CURVES

2 PSIG Set Point

Vent size	3/4"
Failure Type – Lever Disconnect	

All test results are reported at a base of 14.7 PSIA at 60º F and with 0.6 S.G. gas.

Regulator set at 2 PSIG for relief testing with 10 PSIG @ 50 SCFH inlet pressure.

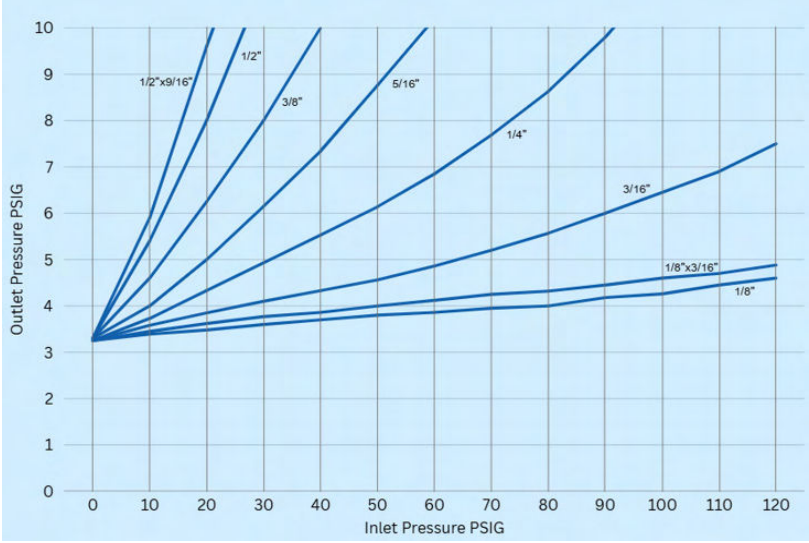

B42 SERIES RESIDENTIAL REGULATOR, MODELS NHP AND RHP

5 PSIG (0.34 mbar) Capacity Table (1% Absolute Droop*), 3/4" Outlet Valve Body

Capacities in SCFH (m3/hr) of 0.6 S.G. gas; base conditions of 14.7 PSIA and 60° F.

Typical Capacity Info.	
ModelB42	
Inlet size	3/4" NPT
Outlet size	3/4" NPT
Spring color	White

Inlet Pressure		Orifice Size						
PSIG	BAR	1/8"	3/16"	1/4"	5/16"	3/8"	1/2"	1/2x9/16
10	0.69	125 (6.8)	145 (4.1)	220 (6.2)	235 (6.7)	285 (8.1)	315 (8.9)	350 (9.9)
15	1.03	155 (4.4)	160 (4.5)	250 (7.1)	275 (7.8)	320 (9.1)		
20	1.38	160 (4.5)	195 (5.5)	260 (7.4)	305 (8.6)	380 (10.1)		
30	2.07	190 (5.4)	255 (7.2)	315 (8.9)	400 (11.3)			
40	2.76	220 (6.2)	270 (7.7)	390 (11.0)				
50	3.45	255 (7.2)	300 (8.5)	450 (12.7)				
60	4.14	275 (7.8)	390 (11.0)	475 (13.4)				
80	5.52	345 (9.8)	480 (13.6)					
100	6.89	420 (11.9)	580 (16.4)					
125	8.62	510 (14.5)	700 (19.8)					
Inlet Effect A (PSIG)		0.05	0.08	0.10	0.12	0.14	0.20	
Lock Up B (PSIG)		0.08	0.10	0.11	0.12	0.14	0.16	

Notes:

A. Change in outlet pressure for 10 PSIG inlet pressure change.
B. Outlet pressure increase required for lock up.

*Individual regulator performance may vary from data shown.

Do not operate orifice in shaded inlet pressure area.

B42 SERIES RESIDENTIAL REGULATOR, MODELS NHP AND RHP

5 PSIG (0.34 mbar) Capacity Table (2% Absolute Droop*), 3/4 Outlet Valve Body

Capacities in SCFH (m3/hr) of 0.6 S.G. gas; base conditions of 14.7 PSIA and 60° F.

Typical Capacity Info.	
Model	B42 R
Inlet size	3/4" NPT
Outlet size	1" NPT
Spring color	White

Inlet Pressure		**Orifice Size**						
PSIG	**BAR**	**1/8"**	**3/16"**	**1/4"**	**5/16"**	**3/8"**	**1/2"**	**1/2x9/16**
10	0.69	175 (5.0)	230 (6.5)	300 (8.5)	355 (10.1)	420 (11.9)	565 (16.0)	600 (16.9)
15	1.03	230 (6.5)	330 (10.3)	430 (12.2)	490 (13.9)	650 (18.4)		
20	1.38	255 (7.2)	385 (10.9)	525 (14.9)	615 (17.4)	770 (21.8)		
30	2.07	370 (10.5)	570 (16.1)	710 (20.1)	855 (21.8)			
40	2.76	405 (11.5)	700 (19.8)	940 (26.6)				
50	3.45	445 (12.6)	845 (23.9)	1160 (32.8)				
60	4.14	535 (15.1)	925 (26.2)	1355 (38.4)				
80	5.52	710 (20.1)	1000 (28.3)					
100	6.89	865 (24.5)	1215 (34.4)					
125	8.62	1050 (29.7)	1480 (41.9)					

Inlet Effect A (PSIG)	0.05	0.08	0.10	0.12	0.14	0.20	0.35
Lock Up B (PSIG)	0.08	0.10	0.11	0.12	0.14	0.16	.19

Notes:

A. Change in outlet pressure for 10 PSIG inlet pressure change.
B. Outlet pressure increase required for lock up.

*Individual regulator performance may vary from data shown.

Do not operate orifice in shaded inlet pressure area.

B42 SERIES RESIDENTIAL REGULATOR, MODELS NHP AND RHP

5 PSIG (0.34 mbar) Capacity Table (1% Absolute Droop*), 1" Outlet Valve Body

Typical Capacity Info.

Model	B42 R
Inlet size	3/4" NPT
Outlet size	1" NPT
Spring color	White

Capacities in SCFH (m3/hr) of 0.6 S.G. gas; base conditions of 14.7 PSIA and 60° F.

Inlet Pressure		**Orifice Size**						
PSIG	**BAR**	**1/8"**	**3/16"**	**1/4"**	**5/16"**	**3/8"**	**1/2"**	**1/2x9/16**
10	0.69	125 (6.8)	150 (4.2)	250 (7.1)	260 (7.3)	290 (8.2)	350 (9.9)	400 (11.3)
15	1.03	160 (4.5)	170 (4.8)	275 (6.4)	280 (7.9)	335 (9.5)		
20	1.38	175 (4.9)	185 (5.2)	280 (7.9)	325 (9.2)	390 (11)		
30	2.07	200 (5.6)	255 (7.2)	335 (9.5)	420 (11.9)			
40	2.76	225 (6.3)	280 (7.9)	400 (11.3)				
50	3.45	265 (7.5)	320 (9.06)	475(13.4)				
60	4.14	295 (8.3)	415 (11.8)	550 (15.6)				
80	5.52	355 (10.1)	500 (14.1)					
100	6.89	450 (12.7)	600 (16.9)					
125	8.62	545 (15.4)	750 (21.2)					

Inlet Effect A (PSIG)	0.05	0.08	0.10	0.12	0.14	0.20	0.35
Lock Up B (PSIG)	0.08	0.10	0.11	0.12	0.14	0.16	.19

Notes:

A. Change in outlet pressure for 10 PSIG inlet pressure change.
B. Outlet pressure increase required for lock up.

*Individual regulator performance may vary from data shown.

Do not operate orifice in shaded inlet pressure area.

B42 SERIES RESIDENTIAL REGULATOR, MODELS NHP AND RHP

5 PSIG (0.34 mbar) Capacity Table (2% Absolute Droop*), 1" Outlet Valve Body

Capacities in SCFH (m3/hr) of 0.6 S.G. gas; base conditions of 14.7 PSIA and 60° F.

Typical Capacity Info.	
Model	B42 R
Inlet size	3/4" NPT
Outlet size	1" NPT
Spring color	White

Inlet Pressure		**Orifice Size**						
PSIG	**BAR**	**1/8"**	**3/16"**	**1/4"**	**5/16"**	**3/8"**	**1/2"**	**1/2x9/16**
10	0.69	200 (5.6)	250 (7.0)	385 (10.9)	400(11.3)	565 (16)	625 (11.6)	650 (18.4)
15	1.03	230 (3.7)	365 (10.3)	430 (12.2)	555 (7.8)	650 (9.1)		
20	1.38	255 (4.5)	445 (12.6)	525 (14.9)	650 (8.6)	770 (10.8)		
30	2.07	370 (5.4)	570 (16.1)	710 (20.1)	950 (11.3)			
40	2.76	405 (6.2)	754 (21.1)	940 (26.6)				
50	3.45	445 (7.2)	855 (24.2)	1160 (32.9)				
60	4.14	535 (7.8)	925 (26.1)	1450 (41.1)				
80	5.52	714 (9.9)	1003 (28.3)					
100	6.89	865 (12.0)	1215 (34.3)					
125	8.62	1054 (29.8)	1480 (41.8)					
Inlet Effect A (PSIG)		0.05	0.08	0.10	0.12	0.14	0.20	0.35
Lock Up B (PSIG)		0.08	0.10	0.11	0.12	0.14	0.16	.19

Notes:

A. Change in outlet pressure for 10 PSIG inlet pressure change.
B. Outlet pressure increase required for lock up.

*Individual regulator performance may vary from data shown.

Do not operate orifice in shaded inlet pressure area.

B42 SERIES RESIDENTIAL REGULATOR, MODELS NHP AND RHP

5 PSIG (0.34 mbar) Capacity Table (1% Absolute Droop*), 1-1/4" Outlet Valve Body

Typical Capacity Info.	
Model	B42 R
Inlet size	3/4" NPT
Outlet size	1-1/4" NPT
Spring color	White

Capacities in SCFH (m3/hr) of 0.6 S.G. gas; base conditions of 14.7 PSIA and 60° F.

Inlet Pressure		Orifice Size						
PSIG	**BAR**	**1/8"**	**3/16"**	**1/4"**	**5/16"**	**3/8"**	**1/2"**	**1/2x9/16**
10	0.69	180 (5.09)	245 (6.9)	255 (7.2)	280 (7.9)	310 (8.8)	385(10.9)	510 (14.4)
15	1.03	190 (5.4)	250 (7.1)	290 (7.6)	300 (8.5)	360 (10.2)		
20	1.38	205 (5.8)	280 (7.9)	320 (9.1)	360 (10.2)	430 (12.2)		
30	2.07	220 (6.2)	320 (9.1)	410 (11.6)	420 (11.9)			
40	2.76	280 (7.9)	370 (10.5)	450 (12.7)				
50	3.45	340 (9.6)	400 (11.3)	520 (14.7)				
60	4.14	350 (9.9)	450 (12.7)	580 (16.4)				
80	5.52	485 (13.7)	630 (17.8)					
100	6.89	500 (14.2)	680 (19.3)					
125	8.62	630 (17.8)	850 (24.1)					
Inlet Effect A (PSIG)		0.05	0.08	0.10	0.12	0.14	0.20	0.35
Lock Up B (PSIG)		0.08	0.10	0.11	0.12	0.14	0.16	.19

Notes:

A. Change in outlet pressure for 10 PSIG inlet pressure change.
B. Outlet pressure increase required for lock up.

*Individual regulator performance may vary from data shown.

Do not operate orifice in shaded inlet pressure area.

B42 SERIES RESIDENTIAL REGULATOR, MODELS NHP AND RHP

5 PSIG (0.34 mbar) Capacity Table (2% Absolute Droop*), 1-1/4" Outlet Valve Body

Capacities in SCFH (m3/hr) of 0.6 S.G. gas; base conditions of 14.7 PSIA and 60° F.

Typical Capacity Info.

Model	B42 R
Inlet size	3/4" NPT
Outlet size	1-1/4" NPT
Spring color	White

Inlet Pressure		**Orifice Size**						
PSIG	**BAR**	**1/8"**	**3/16"**	**1/4"**	**5/16"**	**3/8"**	**1/2"**	**1/2x9/16**
10	0.69	220 (6.2)	250 (7.1)	350 (9.9)	380 (10.5)	480 (13.6)	710 (20.1)	740 (20.9)
15	1.03	230 (3.7)	375 (10.6)	500 (14.2)	575 (16.3)	680 (19.3)		
20	1.38	280 (7.9)	450 (12.7)	580 (16.4)	680 (19.3)	800 (22.7)		
30	2.07	370 (5.4)	580 (16.4)	770 (21.8)	975 (27.6)			
40	2.76	480 (13.6)	775 (21.9)	1000 (28.3)				
50	3.45	600 (17)	875 (24.8)	1180 (33.4)				
60	4.14	630 (17.8)	1000 (28.3)	1475 (41.8)				
80	5.52	900 (25.5)	1200 (34)					
100	6.89	1000 (28.3)	1400 (39.6)					
125	8.62	1200 (34)	1750 (49.6)					
Inlet Effect A (PSIG)		0.05	0.08	0.10	0.12	0.14	0.20	0.35
Lock Up B (PSIG)		0.08	0.10	0.11	0.12	0.14	0.16	.19

Notes:

A. Change in outlet pressure for 10 PSIG inlet pressure change. B. Outlet pressure increase required for lock up.

*Individual regulator performance may vary from data shown.

Do not operate orifice in shaded inlet pressure area.

B42 PERFORMANCE CURVES

5 PSIG Set Point

Model	B42 NHP, RHP
Inlet size	3/4" NPT
Outlet size	1" NPT
Spring	White

All test results are reported at a base of 14.7 PSIA at 60° F and with 0.6 S.G. gas.

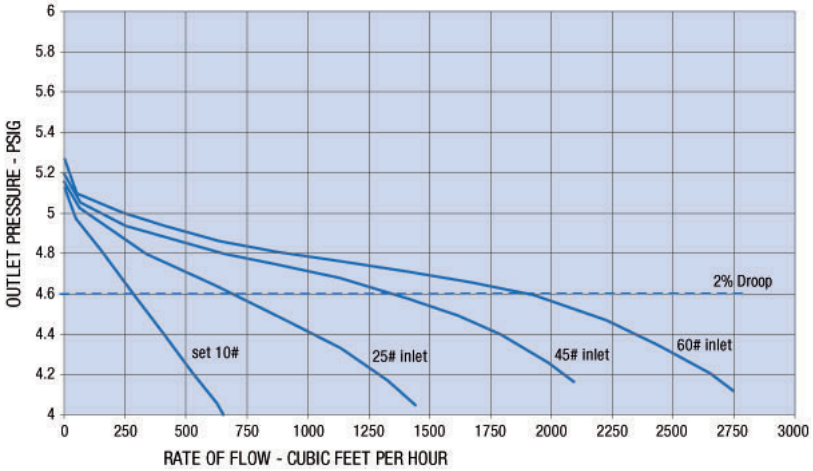

RELIEF CURVES

5 PSIG Set Point

Vent size	1" NPT
Failure Type – Lever Disconnect	

All test results are reported at a base of 14.7 PSIA at 60° F and with 0.6 S.G. gas.

Regulator set at 5 PSIG for relief testing with 10 PSIG @ 50 SCFH inlet pressure.

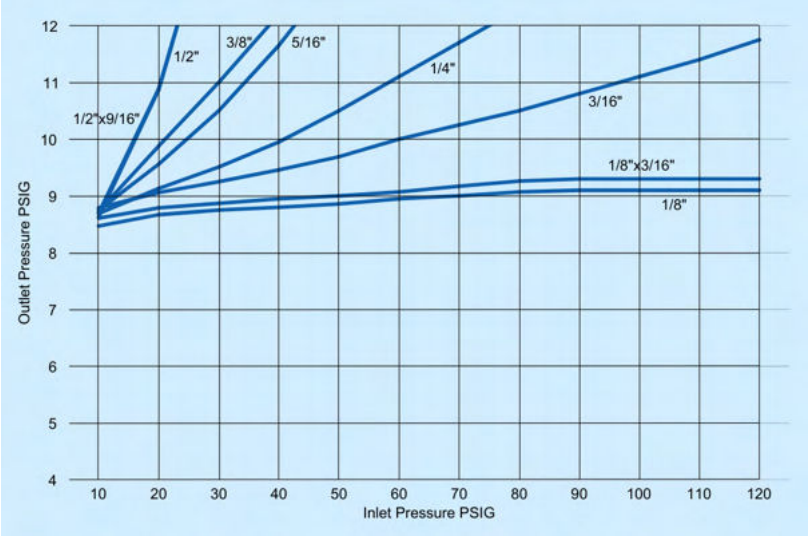

RELIEF CURVES

5 PSIG Set Point

Vent size	3/4"
Failure Type – Lever Disconnect	

All test results are reported at a base of 14.7 PSIA at 60° F and with 0.6 S.G. gas.

Regulator set at 5 PSIG for relief testing with 10 PSIG @ 50 SCFH inlet pressure.

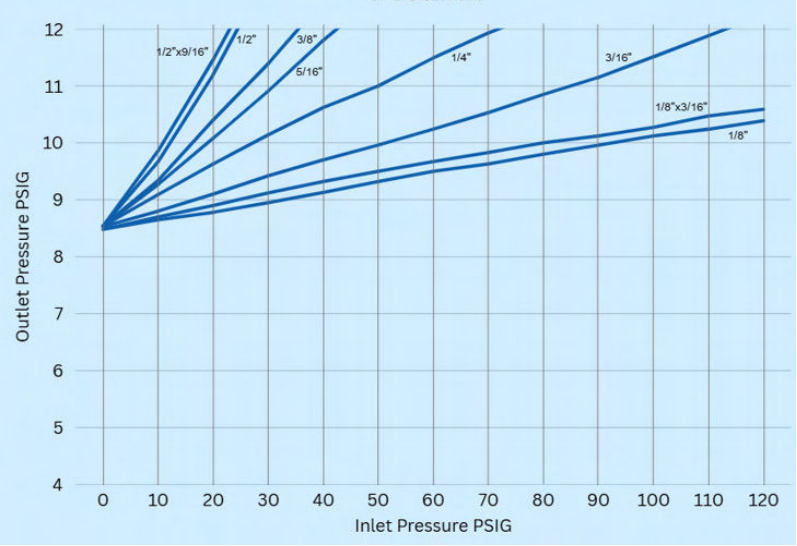

ASSEMBLY POSITIONS

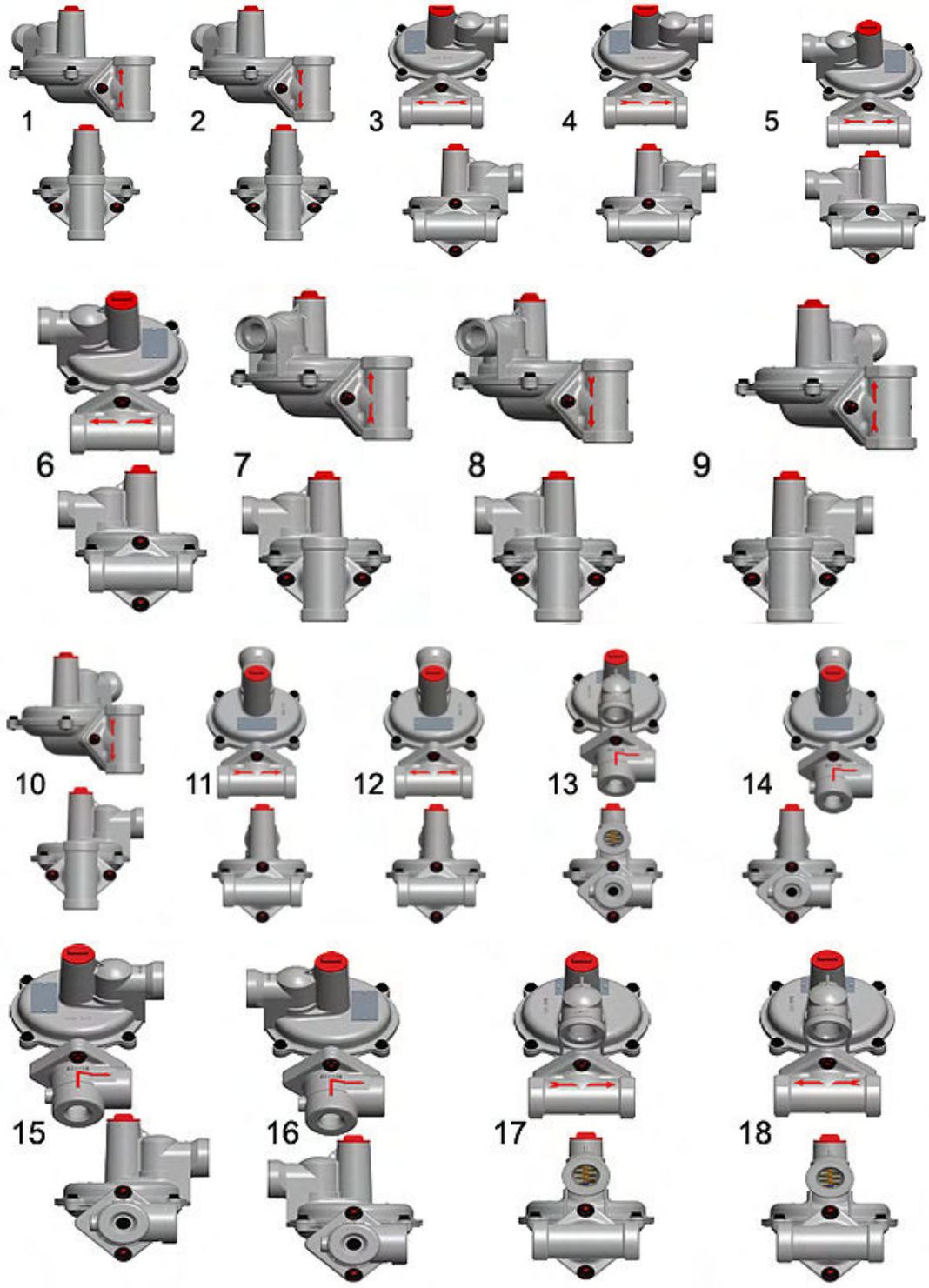

***Other positions available on angle valve bodies

B42 PARTS LIST DIAGRAM

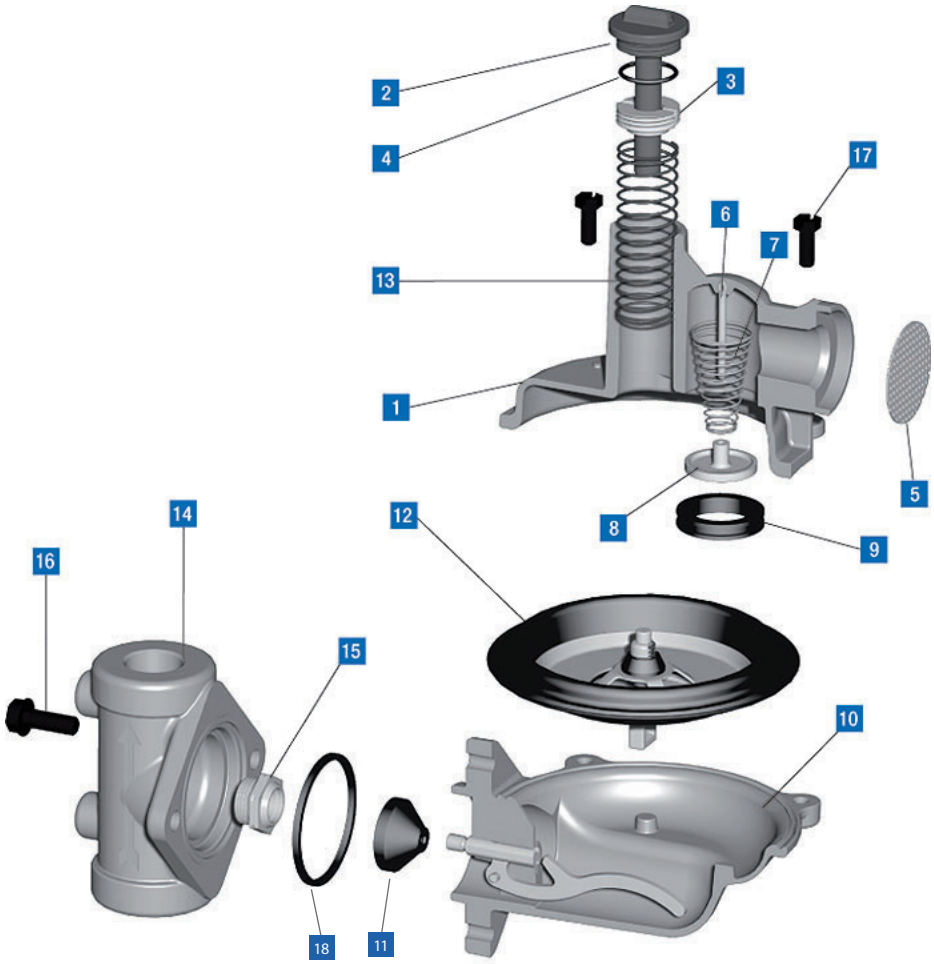

Item Number	Part Number	Quantity		Description
		N	R	
1	**Upper Case Assy**	1	1	
	753443-0500			Upper diaphragm case Standard, 1" vent
	710106	(1, 5, 6, 7, 8 &9)		Upper diaphragm case Assembly 1" standard
	753442-0500			Upper diaphragm case 3/4" vent
	710105	(1, 5, 6, 7, 8&9)		Upper diaphragm case Assembly 3/4"
	753445-0500			Upper diaphragm case High pressure, 1" vent
	710108	(1, 5, 6, 7, 8&9)		Upper diaphragm case Assembly 1" **HP**
	753444-0500			Upper diaphragm case High pressure, 3/4" vent
	710107	(1, 5, 6, 7, 8&9)		Upper diaphragm case Assembly 3/4" **HP**
2	**Seal caps**	1	1	** Includes #4 Seal cap O ring
	76026001			Seal cap with gasket, gray
	76026101			Seal cap with gasket, red
	76026201			Seal cap with gasket, green
	76026301			Seal cap with gasket, White
4	765501			Seal cap gasket
3	Adjustment Screw	1		1

Item Number	Part Number	Quantity		Description
		N	R	
	760215			Adjustment screw (plastic), standard
	760217			Adjustment screw (Aluminum) high pressure
	Vent Assy Parts			
5	762933	1	1	Vent screen
6	75483401	1	1	Vent valve disc pin
7	762651	1	1	Vent valve spring
8	765181	1	1	Vent valve disc
9	765685	1	1	Vent valve seat
10	**Lower Case Assy**	1	1	****includes lower case (752441-0500), lever (761305), lever pin (754833) & valve stem (754181) installed**
	715075			Lower diaphragm case assembly
11	**Valve Seats**	1	1	
	765051			Valve Seat Standard 75D B42
	765053			Valve Seat Silicone 70D B42
12	**Diaphragm Assy**			**Includes: Diaphragm/upper plate (720100), Lower plate (75606102), bushing (754911), relief spring (see below) and spring clip (761401) installed.
	720085		1	Complete Diaphragm assembly, 7 iwc elief(R)Standard
	720086		1	Complete Diaphragm assembly, 5 iwc relief (R)
	720084		1	Complete Diaphragm assembly, 6 iwc relief (R)
	720087		1	Complete Diaphragm assembly, 9 iwc relief (R)
	720091	1		Complete Diaphragm assembly, non-relief **(N)**
	762653		1	Purple Relief spring, 7" w.c., standard
	762655		1	Orange Relief spring, 5" w.c.
	762654		1	Red Relief spring, 6" w.c.
	762656		1	Black Relief spring, 9" w.c.
13	**Adjustment Springs**	1	1	
	762649			5-7" w.c. green Adjustment springs, please specify color
	762645			6-8" w.c. Brown
	762646			8-14" w.c. Blue
	762647			12-28 w.c. Silver
	762003			4-9" w.c. Dark green
	762117			6-16" w.c. Dark green
	762002			5.5-9" w.c. Orange
	762650			1-2 PSIG Yellow/black
	762660			1.25-2.25 PSIG Purple
	76213101			2-4 PSIG yellow* (high pressure)
	76213701			4-5 PSIG white* (high pressure)
14	**Straight Valve Bodies**	1	1	
	750586-0500			1/2" x 1/2" NPT Straight Valve body Painted
	750587			1/2" x 1/2" NPT w/ 1/8" inlet. Pipe Plug
	750588-1500			1/2" x 1/2" NPT w/ 1/8" outlet Pipe Plug

Item Number	Part Number	Quantity		Description
		N	R	
	750589			1/2″ x 1/2″ NPT w/ 1/8″ inlet & outlet Pipe Plugs
	750527-100500			3/4″ x 3/4″ NPT Straight Valve body Painted
	750528-0500			3/4″ x 3/4″ NPT w/ 1/8″ inlet Pipe Plug
	750529-1500			3/4″ x 3/4″ NPT w/ 1/8″ outlet Pipe Plug
	750530			3/4″ x 3/4″ NPT w/ 1/8″ inlet & outlet Pipe Plugs
	750531-100500			3/4″ x 1″ NPT Straight Valve body Painted
	750532-0500			3/4″ x 1″ NPT w/ 1/8″ inlet Pipe Plug
	750533-0500			3/4″ x 1″ NPT w/ 1/8″ outlet Pipe Plug
	750534-0500			3/4″ x 1″ NPT w/ 1/8″ inlet & outlet Pipe Plugs
	750567-0500			3/4″ x 1-1/4″ NPT Straight Valve body Painted
	750568-0500			3/4″ x 1-1/4″ NPT w/ 1/8″ inlet Pipe Plug
	750569			3/4″ x 1-1/4″ NPT w/ 1/8″ outlet Pipe Plug
	750792			3/4″ x 1-1/4″ NPT w/ 1/8″ inlet & outlet Pipe Plugs
	750535-100500			1″ x 1″ NPT Straight Valve body Painted
	750536-0500			1″ x 1″ NPT w/ 1/8″ inlet Pipe Plug
	750537-0500			1″ x 1″ NPT w/ 1/8″ outlet Pipe Plug
	750538			1″ x 1″ NPT w/ 1/8″ inlet & outlet Pipe Plugs
	750570-0500			1″ x 1-1/4″ NPT Straight Valve body Painted
	750571			1″ x 1-1/4″ NPT w/ 1/8″ inlet Pipe Plug
	750572			1″ x 1-1/4″ NPT w/ 1/8″ outlet Pipe Plug
	750793			1″ x 1-1/4″ NPT w/ 1/8″ inlet & outlet Pipe Plugs
	750573-0500			1-1/4″ x 1-1/4″ NPT Straight Valve body Painted
	750574-0500			1-1/4″ x 1-1/4″ NPT w/ 1/8″ inlet Pipe Plug
	750575-0500			1-1/4″ x 1-1/4″ NPT w/ 1/8″ inlet & outlet Pipe Plugs
14	**Angle Valve Bodies**	1	1	
	750541-010500			3/4″ x 3/4″ NPT Angle Valve body Painted
	750542-010			3/4″ x 3/4″ NPT Angle w/ 1/8″ inlet Pipe Plug
	750542-011			3/4″ x 3/4″ NPT Angle w/ 1/8″ outlet Pipe Plug
	750542-012			3/4″ x 3/4″ NPT Angle w/ 1/8″ inlet & outlet Pipe Plugs
	750543-010500			3/4″ x 3/4″ NPT Angle Valve body Painted
	750544-010500			3/4″ x 3/4″ NPT Angle w/1/8″ inlet Pipe Plug
	750544-011			3/4″ x 3/4″ NPT Angle w/1/8″ outlet Pipe Plug
	750544-012			3/4″ x 3/4″ NPT Angle w/1/8″ inlet & outlet Pipe Plugs
	750545-010500			1″ x 1″ NPT Angle Valve body Painted
	750546-010500			1″ x 1″ NPT Angle w/1/8″ inlet Pipe Plug
	750546-011			1″ x 1″ NPT Angle w/1/8″ outlet Pipe Plug
	750546-012			1″ x 1″ NPT Angle w/1/8″ inlet & outlet Pipe Plugs
15	**Straight Orifices**	1	1	**Aluminum**
	757611			1/8″
	757619			3/16″
	757623			1/4″

Item Number	Part Number	Quantity		Description
		N	R	
	757627			5/16″
	757631			3/8″
	757453			1/2″
15	**Stepped Orifices**	1	1	**Aluminum**
	757651			1/8″ x 3/16″
	75767101			1/2″ x 9/16″
	757665			3/16″ x 1/4″
	757667			7/32″ x 1/4″
	757669			1/4″ x 5/16″
15	**Brass Orifices**	1	1	**(Not readily available, long lead times possible)**
	757641			1/8″
	757643			3/16″
	757645			1/4″
	757647			5/16″
	757649			3/8″
	757463			1/2″
	Screws			
16	80006703	2	2	Valve body screw 5/16 - 18 x 7/8 lg.
17	010323-002	4	4	Case screw 1/4 - 20 x 5/8 lg.
	Gaskets			
18	765605	1	1	Valve body gasket
	769417	1	1	Warning Label w/serial number
	Wrenches			*** Wrenches will need to be ordered thru Accumet***
	799051			Adjustment tool
	799017			Orifice socket 7/8″
	Part Number			**Torque Specifications**
	010323-002			Case Screws: 35 - 45 in. lb.
	80006703			Valve body screws: 85 - 115 in. lb.
	See above			Orifice: 300 +- .25 in. lb.

All orders for wrenches will need to be placed with Accumet Corp.

PLEASE EMAIL PO's TO ORDERS@ACCUMETCORP.COM

VENT LINES FOR REGULATORS

When constructing vent lines to be attached to regulators installed indoors, follow a few basic rules:

a. Never use pipe sizes smaller than the vent size; smaller pipe sizes restrict the gas flow. If a long gas run must be used, ROOTS Regulators advises increasing the pipe one nominal size every ten feet to keep the flow restriction as low as possible.

b. Keep the vent line length as short as possible to minimize the restriction and reduce the vent's tendency to cause regulator pulsation.

c. Support the vent pipe to eliminate strain on the regulator diaphragm case.

d. Always point outdoor vent pipes in the downward position to reduce the possibility of rain, snow, sleet, and other moisture entering the pipe. Install a bug screen in the end of the pipe.

e. Do not locate the vent line terminus near windows, fans, or other ventilation equipment. See the installation instructions furnished with the regulator.

f. Adhere to all applicable codes and regulations.

g. If your vent pipe causes regulator pulsation, consult your sales representative or manufacturer.

h. ROOTS Regulators strongly recommends running a separate vent line for each regulator. Headers with various installed devices can cause regulator malfunction.

Caution Ensure the end of the vent line is away from ANY potential ignition sources. It is the installer's responsibility to ensure the vent line is exhausting to a safe environment.

INSTALLATION

Warning ROOTS Regulators does not endorse or warrant the completeness or accuracy of any third party regulator installation procedures or practices, unless otherwise provided in writing by ROOTS Regulators. Follow your company's standard operating procedures regarding the use of personal protection equipment (PPE). Adhere to guidelines issued by your company in addition to those given in this document when installing regulators.

a. Remove all shipping plugs from the inlet, outlet, and vent of any ROOTS Regulator before installation.

b. Keep the piping interior (inner diameter), ROOTS Regulator inlet, and regulator outlet free of dirt, chemical sealant (pipe dope), Teflon tape, or other debris. Materials in piping or ROOTS Regulator inlet or outlet creating a loss of pressure control.

c. Gas must flow through the ROOTS Regulator valve body in the same direction as the arrow on the regulator body. Gas flowing in the wrong direction may cause an over-pressure condition and damage the Root Regulator.

d. Apply a gas resistant pipe joint sealant on the male (exterior) pipe threads. Do not use any type of Teflon tape on ROOTS Regulator installations. Do not apply pipe joint sealant on the female (interior) pipe threads of the ROOTS Regulator as joint materials could lodge in the regulator creating a loss of pressure control.

e. During product installation, do not clamp the valve body in a vice, this may lead to permanent damage rendering a ROOTS Regulator that is not fit for service. During product installation, use of excessive force and unsafe practices can lead to permanent damage rendering a ROOTS Regulator that is not fit for service. It is recommended to not exceed 3 full turns past hand tight into the ROOTS Regulator valve body per SAE standard AS71051. Do not use oversized pipe wrenches and/or "Cheater" bars during the installation of ROOTS Regulators which can damage valve body from an over torque situation..

f. When the regulator is installed OUTDOORS, the vent must always be positioned so that rain, snow, moisture or foreign particles cannot enter the vent opening. ROOTS Regulator recommends positioning the pilot vent downward to avoid entry of water or other matter which could interfere with the proper operation of the regulator. The vent should be located away from building eaves, window openings, building air intakes and above the expected snow level at the site. The vent opening should be inspected periodically to insure it does not become blocked by foreign material as outlined in DOT PHMSA-RSPA-2004-19856.

g. When the regulator is installed INDOORS, the vent must be piped to the outside atmosphere using the shortest length of pipe, the fewest possible pipe elbows, and a pipe diameter as large as the vent size or larger. USING VENT PIPE SMALLER THAN THE VENT CONNECTION LIMITS THE REGULATOR'S INTERNAL RELIEF VALVE CAPACITY. The outlet end of the pipe must be protected from moisture and the entrance of foreign particles. The regulator should be specified by the user with the size vent and pipe threads desired to make the vent pipe connection.

STARTUP PROCEDURE

a. Mount a pressure gauge downstream of the regulator to monitor the downstream pressure.

b. With the downstream pressure valve closed, slowly open the inlet valve. The outlet pressure should rise to slightly more than the setpoint. Verify there are no leaks and all connections are tight.

c. The regulator was preset at the factory to match order specifications. If necessary, adjust the outlet pressure by removing the seal cap on the top of the spring housing and adjusting the ferrule or screw inside the spring housing using a large flat-head screwdriver. With a small amount of gas flowing through the regulator, rotate the ferrule clockwise to raise the outlet pressure or counterclockwise to lower the outlet pressure.

d. Replace the seal cap and check for leaks after the desired outlet pressure is achieved.

The regulator is ready for operation.

SAFETY WARNING

This product, as of the date of manufacture, is designed and tested to conform to all governmental and industry safety standards as they may apply to the manufacturer. The purchaser/user of this product must comply with all fire control, building codes, and other safety regulations governing the application, installation, operation, and general use of this regulator to avoid leaking gas hazards resulting from improper installation, startup, or use of this product.

ROOTS Regulators strongly recommends installation by a qualified professional and periodic inspection of pressure regulators (inspections may be required by local applicable codes or regulations).

Inspections should include checking for gas quality, cycle numbers, external environmental changes, and operating conditions that impact wear on the regulator's moving parts. To ensure safe and efficient operation of this product, replace worn or damaged parts found during inspection.

Limited Warranty

ROOTS Regulators are subject to the terms and conditions of the Natural Gas Solutions North America, LLC General Terms & Conditions For Sale of Products, Parts and Services, and no other terms shall apply, unless agreed upon by the parties in writing. The Natural Gas Solutions North America, LLC General Terms & Conditions For Sale of Products, Parts and Services can be found on the Dresser Utility website: dresserutility.com/forms-questionnaires-and-terms-conditions-sale.

Ordering Information

Specify:

1. Inlet and outlet connection size and type
2. Model number
3. Outlet pressure desired
4. Pilot needed
5. Inlet pressure range
6. Type of gas and maximum capacity required
7. Assembly position number (see chart above)
8. Special requirements such as tagging, ⅛" pipe plug tap, seal wire, etc.

ROOTS Regulator + ROOTS Meter Compatibility

Small	Regular	Large
2M175	*D-Series*	*5M175*

ROOTS Regulators

16240 Port Northwest Drive
Houston, TX 77041
T: 1-800-521-1114
F: 1-800-335-5224

© 2025 Natural Gas Solutions North America, LLC – All rights reserved. Dresser Utility Solutions reserves the right to make changes in specifications and features shown herein, or discontinue the product described at any time without notice or obligation. Contact your Dresser Utility Solutions representative for the most current information. The Dresser Logo and all Trademarks containing the term "Dresser" are the property of Dresser, LLC, a subsidiary of Baker Hughes.

DRESSER UTILITY SOLUTIONS
www.dresserutility.com